Service Manual
Buses

Section 3 (37)
Electrical System
B7L 2-axle, articulated and B7TL double-decker buses with Volvo instrument panels

Chassis component wiring diagrams
for B7L buses with chassis number 000716 onwards,
and for B7TL buses with chassis numbers 001502 onwards

TP 16434/1 Second Edition

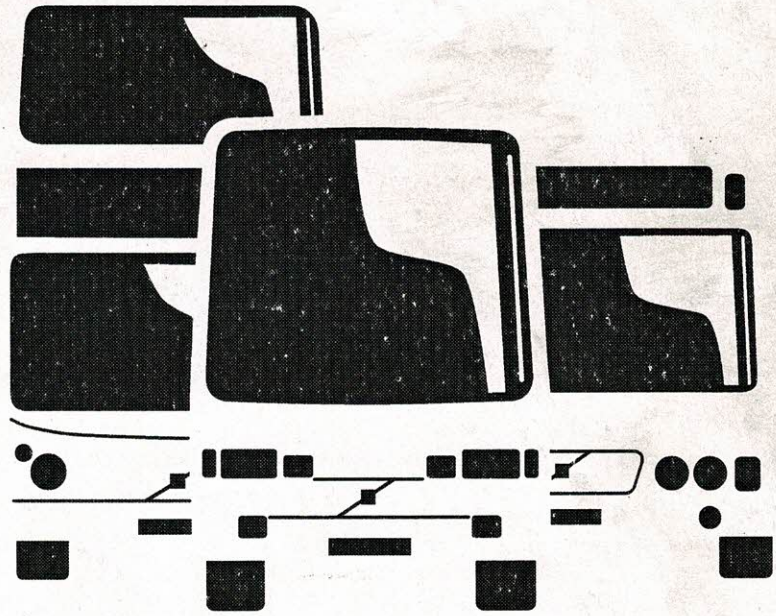

VOLVO

Contents

Electrical system, B7L and B7TL chassis

	Page
Introduction	1
General multiplex principles	1
Front and rear electrical centre components	2
Fuse and relay printed circuit cards	3
Component symbols	4
Power supply and ground connections	5
Location of VECU and CECM units	6
Labelling of Volvo electronic units	6
Data link cabling	7
Control unit architecture	7
Binary logic levels	7
Signals and their types	7
Instrument panel display menus	8
Connections between chassis and body	9

General diagrams

BA	250 kbit/s databus type J1939 (Green/Yellow)	12
BB	9600 bit/s databus type J1708 (Gray/Orange)	13
BC	250 kbit/s C-bus (Blue/Black)	14
CA	Body connections	15
CB	Fuse and relay printed circuit cards	16
DA	Control module power supply	17
CC	Ground connections, front	18
CCA	Ground connections, rear	19

Functional schematic diagrams and circuit descriptions

DB1	B7L buses engine control unit (9070)	22
DB2	B7TL buses engine control unit (9070)	26
DC	Vehicle Electronic Control Unit (9074)	30
DD	Central Electronic Control Module for chassis (CECM-C)	34
EA	Main relay, emergency cut-out switch	38
EB	Alternators	42
EC	Key switch, feed switch and engine start/stop circuits	46
FA	Bus Instrument Cluster, left side (702LHS)	50
FB	Bus Instrument Cluster, centre, with tachograph (702CTR)	54
FC	Bus Instrument Cluster, right side (702RHS)	58
FD	Bus Instrument Cluster, centre, without tachograph (702CTR)	62
FE	Buzzer	66
GA	Headlights, Parking lights	68
GC	Direction indicators, Hazard warning lights, Panel lamps dimmer	72
GD	Brake lights	76
GF	Windscreen wipers and washers	80
HA	ZF HP 502 automatic transmission and reversing lights	84
HB	Voith transmission, door brake warning lamp and reversing lights	88
IA	ABS and ASR, 2-axle buses	92
IB	ABS and ASR, articulated buses	96
JA	ECS, 2-axle buses	100
JB	ECS, articulated buses	104
KA	Fire warning	108
KB	Parking brake	112
KC	Horn	116
KF	Steering wheel adjustment	118
KG	Air brake pressure gauges	120
KH	Fuel level indication	122
KJ	Door brake	124
LA	Turntable, articulated buses	126
CD	Diagnostic and EOL connections	130

Index

Component number index 134

Order number: TP 16434/1

Chassis electrical systems, B7L and B7TL buses

Introduction

This Service Manual describes the most recent (2004) chassis electrical system with Controller Area Network (CAN) communication, a Central Electronic Control Module (CECM) and Control Modules (CM) for Volvo B7L (standard and artic configurations) and B7TL (double-deck) buses with Volvo instrument panels.

The chassis electrical circuits are divided into separate functional areas using the same principles as in other Volvo Bus Electrical System Manuals. Any differences between the B7L and B7TL model wiring systems are clearly shown.

Note however that the schematic diagrams on the first pages of each section show the complete wiring harness details, including wiring that is present but not may actually be used in a specific bus.

General principles of the multiplex system used in B7L/B7TL buses

The Bus Electrical Architecture (BEA) in these Volvo bus models permits control units with different functions, such as those for engine, transmission and ABS/ASR control, to communicate with each other via twisted-pair network cabling. This means that every control unit can exchange information with any other control unit, as required. The internal digital programs contained in the control units can then use this information to control the bus, while providing indications, information and warnings to both the driver and service personnel.

Note that the ECS (9002) control unit and turntable control unit (9096) are <u>not</u> included in the multiplex networks.

Each control unit is located as close as possible to the components with which it is associated, to ensure the minimum cable length between them. The following control units are included in the bus:

- Engine Electronic Control Unit (9070)
- Vehicle Electronic Control Unit (9074)
- Bus Instrument Cluster (702)
- Central Electronic Control Module (CECM)
- ABS/ASR (anti-blocking) control unit (9008)
- ECS (suspension) control unit (9002)
- Voith automatic transmission (909) (option)
- ZF automatic transmission (909) (option)
- Turntable control unit for articulated buses (9096)

There are in addition four Control Module units, 2 at the front and 2 at the rear, interfacing the CECM to individual chassis components such as relays, solenoid valves, sensors, etc. The Control Modules are interconnected to the chassis CECM via the C-bus, which has a transmission speed of 250 kbit/s.

Two further databus networks link the chassis CECM to the other control units, one also being a high speed 250 kbit/s bus called SAE J1939 and used for transmitting information that requires very fast updating, such as the accelerator pedal position, which is sent from the sensing potentiometer via the VECU (9074) to the Engine Electronic Control Unit and naturally must not be delayed.

The other databus is called SAE J1587/1708, and runs at 9600 bit/s, transmitting less vital signals such as the oil pressure sensor signal to give a reading on the oil pressure gauge. This link also carries error messages.

Each twisted pair network has its own terminations (9029) and wire colours, easy to identify.

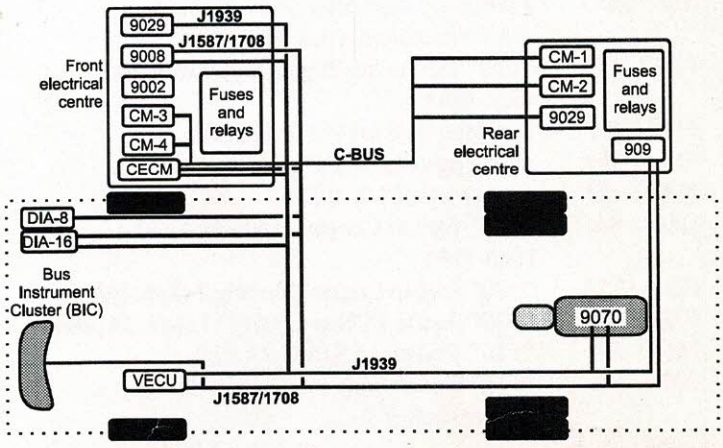

Principal components and networks in B7L and B7TL buses

Refer to page 7 for a similar diagram showing the layout for B7L articulated pusher buses

Front and rear electrical centre components

Note: On the schematic diagrams, relays are only labelled with their numbers, e.g. "2" instead of "RL2".

Fuses in battery box

Fuse	Rating	Circuit
F50	50A	"+" feed to chassis (Sch. EA)
F51	20A	"+" feed to body (Sch. EA)
F52	50A	"+30" feed to chassis (Sch. EA)
F53	20A	"+30" feed to body (Sch. EA)
F54	20A	"+30" feed to body (Sch. EA)
F55	20A	"+30" back-up feed to (9074) (Sch. EA)
F56	20A	"+" feed to body (Sch. EB)
F57	50A	Alternator feed (Sch. EB)

Fuses and relays on front electrical centre card

Note: Fuses and relays not listed here are spares.

Fuse	Rating	Circuit protected by fuse
F1	15A	All feed switch (199) functions except destination sign lighting (Sch. EC), "+30" feed to Tachograph (Sch. FB), "+30" feed to parking lights (Sch. GA), EOL socket (Sch. CD)
F2	8A	"+" feed to BIC left hand side (Sch. FA), Tachograph and clock (Sch. FB), BIC centre unit electronics (Sch. FD), Destination sign lighting (Sch. EC), Fire warning indication (Sch. KA)
F3	15A	"+30" to DIA-8 and DIA-16 (Sch. CD)
F4	15A	"+30" feed to Control Module 4 (Sch. DA)
F6	8A	Switched "+30" feed to (9074) (Sch. DC)
F7	5A	Oil separator solenoid valve (Sch. GD)
F8	15A	Battery master switch (144), (Sch. EA), Horn (Sch. KC)
F9	15A	"+30" feed to VECU (9074) (Sch. DC)
F10	8A	"+15" feed to dir. indicators (Sch. GC)
F11	15A	"+30" body feed via "BB5":11 (see page 8)
F12	8A	"+30" feed to ABS (Sch. IA, IB)
F13	8A	"+15" feed to BIC INFO lamp (Sch. FA), Tachograph (Sch. FB), BIC Centre unit indicator lamps (Sch. FD), Fuel level gauge and warning LED (Sch. FC)
F14	8A	"+" feed to hazard warning lights (Sch. GC), CECM (Sch. DD)
F15	8A	Frequency converter (only buses with CAV alternators) (Sch. FB)
F16	15A	"+30" feed to headlights high/low beam (Sch. GA)
F17	8A	Latching feed to (361) (Sch. EA)
F18	15A	Brake lights (Sch. GD), Buzzer (Sch. FE)
F19	15A	Key switch, (Sch. EC)
F20	8A	"+30" feed to Control Modules 3 and 4 (Sch. DA)
F21	15A	"+30" feed to Control Module 3 (Sch. DA)
F23	8A	"+30" feed to ECS and "BB5":1 (Sch. JA, JB)
F25	8A	"+30" feed to ABS (Sch. IA, IB)
F26	8A	"+15" feed to body via "BB5":12, Buzzer (Sch. FE)
F27	8A	Turntable control (9096) (Sch. LA)
F28	8A	Windscreen washers, headlamps wash/wipe (Sch. GF)
F29	8A	Windscreen wipers (Sch. GF)
F30	8A	"+30" feed to CECM-C (Sch. DD)

Relay	Circuit
RL2	"+30" feed to ECS and "BB5":1 (Sch. JA)
RL3	"+15" feed to front circuits (Sch. EC) and Turntable control unit (9096) (Sch. LA)
RL6	Articulated bus configuration for ECS (Sch. JA)
RL7	Switched "+30" feed to VECU (9074) (Sch. DC, EA)
RL8	"+30" feed to VECU (9074) (Sch. DC, EA)
RL10	Latching feed to (361) (Sch. EA)

Fuses and relays on rear electrical centre card

Note: Fuses and relays not listed here are spares.

Fuse	Rating	Circuit protected by fuse
F4	15A	"+" feed to Control Module 1 (Sch. DA)
F5	15A	Starter motor solenoid (Sch. EC)
F9	15A	Engine run relays (Sch. DB1, DB2)
F10	8A	"+15"feed to (196ZF) (Sch. HA) "+15"feed to (909Voith) if no ABS (Sch. HB)
F12	8A	Fire warning sensors (Sch. KA)
F15	8A	Exh. gas press. sol. valves (Sch. DB1, DB2)
F17	8A	"+30" feed to (909ZF) (Sch. HA, HB)
F20	8A	"+" feed to Control Modules 1 and 2 (Sch. DA)
F21	15A	"+" feed to Control Module 2 (Sch. DA)
F22	15A	Engine Electronic Control Unit (9070), Engine stop solenoid valve (Sch. DB1, DB2)
F27	8A	Engine start button at rear (185B) (Sch. EC) B7TL cooling fan hydraulic oil switches (Sch. DB2)
F28	8A	"+15" feed to (909) (Sch. HA, HB)
F29	8A	Starting heater relay (Sch. DB1, DB2)
F30	8A	"+30" feed to (909) and ZF auto. transm. "DIA" connector (Sch. HA)

Relay	Circuit
RL3	"+15" power supply to rear circuits (Sch. EC)
RL5	Starter motor solenoid (Sch. EC)
RL7	"+30" feed to Engine Electronic Control Unit (9070), Engine stop solenoid valve (Sch. DB1, DB2)
RL8	"+30" feed to RL7(rear) (Sch. DB1, DB2)
RL10	"+30" feed to (909Voith) (Sch. HB)

CB Fuse and relay printed circuit cards on the chassis front and rear electrical centres

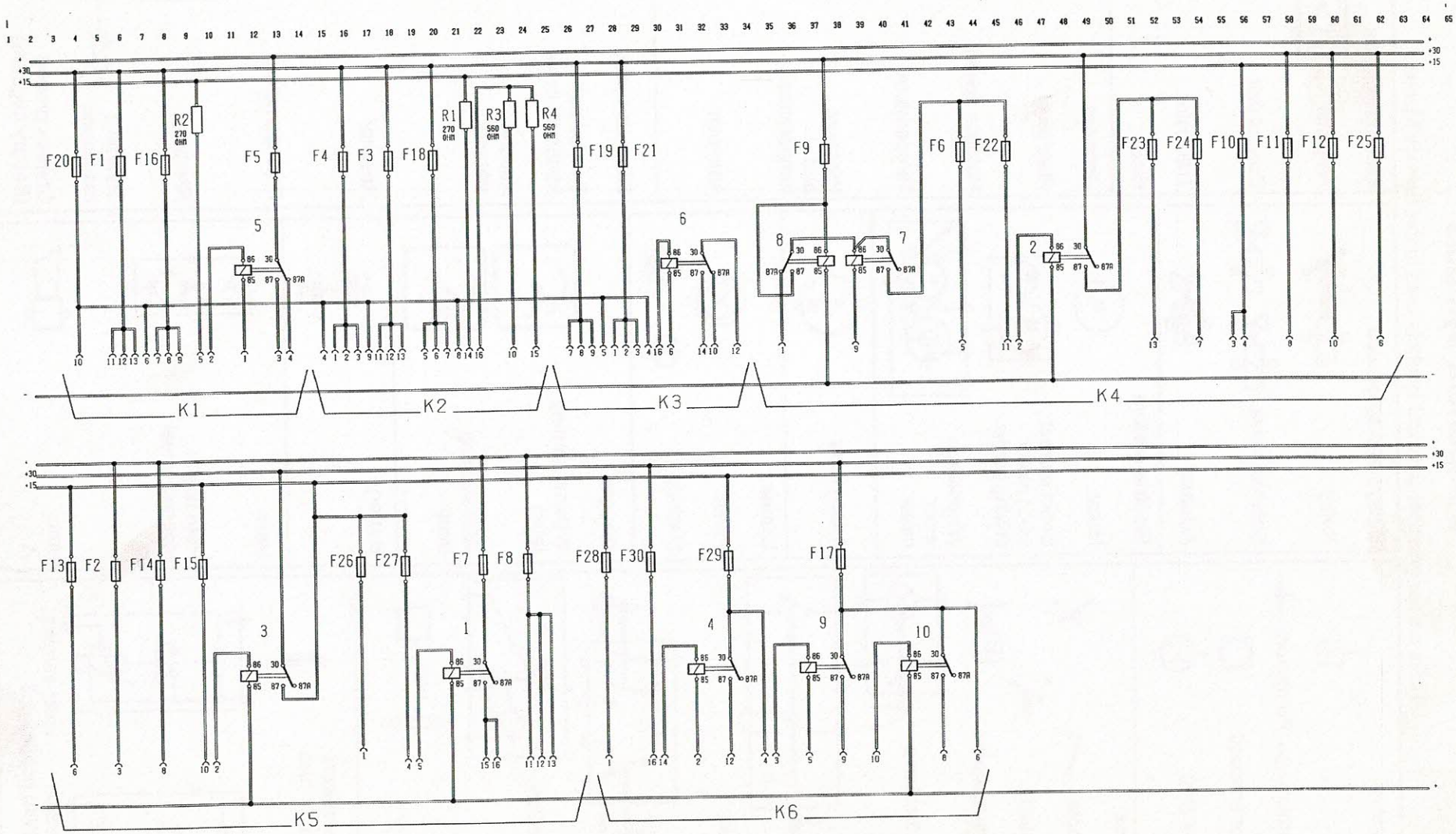

Component symbols

These are the principal electrical symbols used in this Service Manual.

Connectors

Body

Detachable — Permanent

Bolted or screwed

Fast charging socket

Switches

Single-pole

Mechanical

Pressure-operated

With built-in lamp

Multi-pole

Multi-pole, two-way

Multi-position, rotary

Thermal

Circuit breakers

Automatic or fuse

Earlier version — Later version

With holding coil

Relays and solenoids

Relay

Solenoid valve

Actuator

Electric motors

Motor

Direct current (d.c.) motor driving pump

Windscreen wiper motor

Alternators

Lamps

Panel

Flashing

Gauges

Without warning lamp

With warning lamp

Battery

Horn

Horn ring in steering wheel

Horn

Electronic units

Amplifier

Control unit

Transistor

Diode

Sensors

Fluid level

Rotation speed

Temperature

Pressure and temperature

Ammeter

Miscellaneous

Twisted pair (databus) cable

Heating element

Resistor

Potentiometer

Rheostat

Trimming resistance

Chassis ground (Battery negative)

Power supply and ground connections

EARLY VERSION OF MAIN RELAY (342)

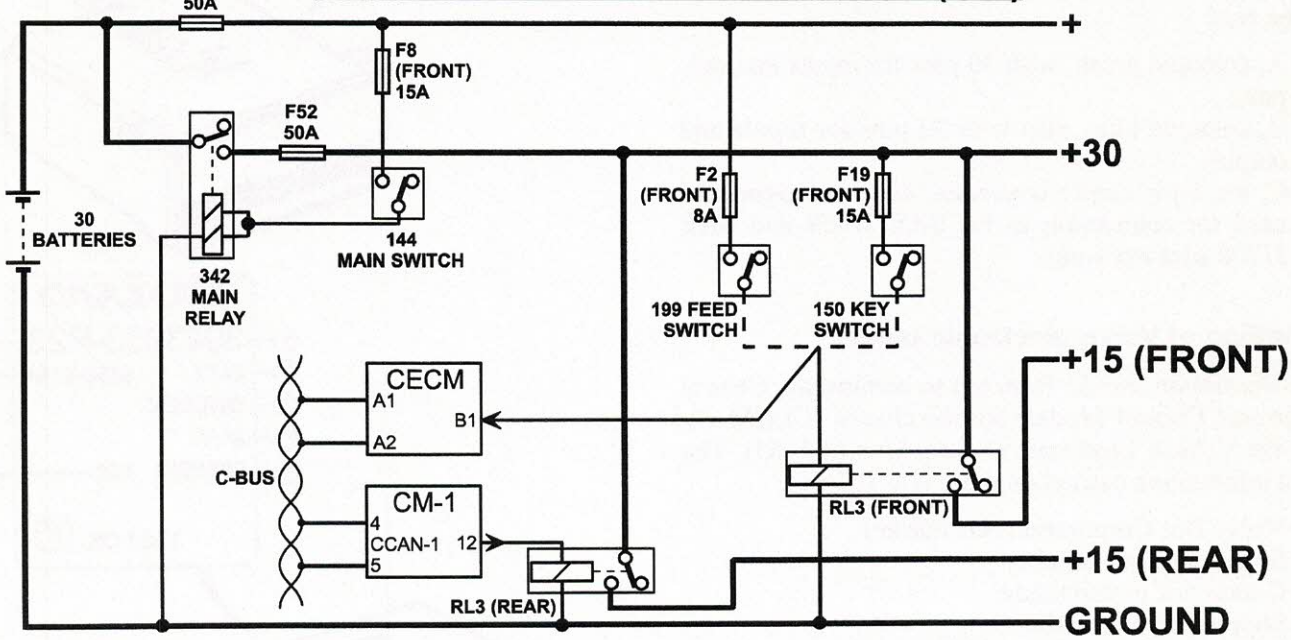

LATER VERSION OF MAIN RELAY (342)

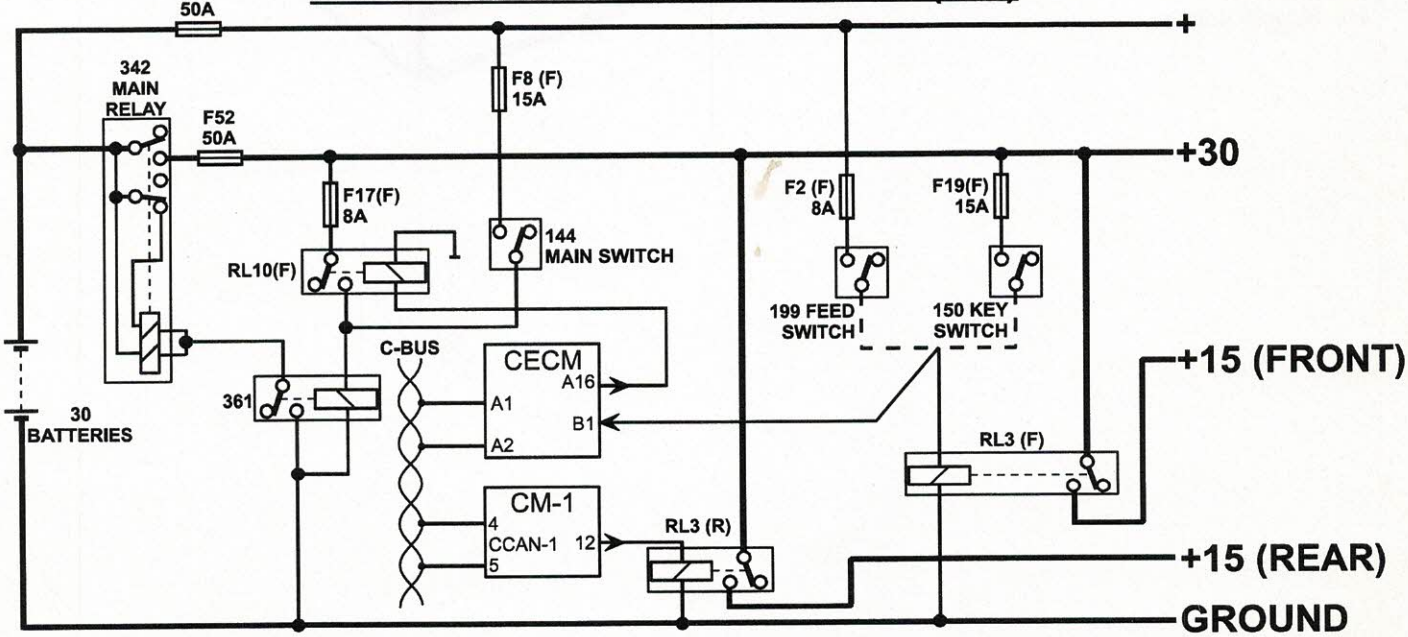

Location of VECU and CECM units

The VECU is located underneath the instrument panel (dashboard). The CECM-C is among the other components in the front electrical centre, usually mounted above or close to the driver. The wiring to these two units must not be disturbed, nor may they be moved to any other position.

The VECU and the CECM both have three connectors at the rear:

- A, coloured green, with 30 pins for inputs and outputs.
- B, coloured blue, also with 30 pins for inputs and outputs.
- C, the 5-pin centre connector, coloured green and used for connection to the SAE J1939 and SAE J1708 data networks.

Labelling of Volvo electronic units

The illustration shows, from top to bottom, the Central Electronic Control Module for the chassis (CECM-C), and the Vehicle Electronic Control Unit (VECU). The label information carried on these is as follows:

1. Volvo Bus Corporation part number
2. Supplier's code number
3. Country of manufacture
4. Supplier's part number
5. Product name
6. Product status
7. Production date
8. Supplier's production status
9. Barcode
10. Supply voltage

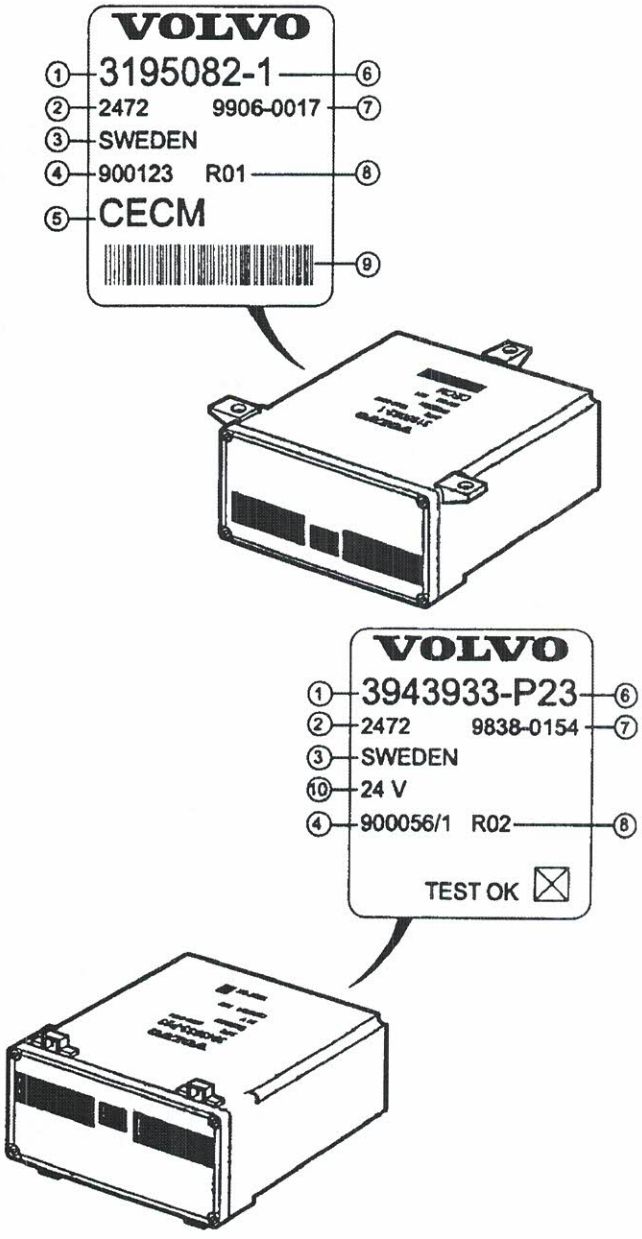

Data link cabling

Each networks consists of a differently colored pair of wires, twisted at 30 or 40 turns per meter, in accordance with the Volvo standard. The colors are:

SAE J1708	30 turns/meter	Gray and Orange
SAE J1939	40 turns/meter	Green and Yellow
C-bus		Blue and Black

All joints and junctions have been ultrasonically welded to ensure the best possible contact. Note that Volvo Bus Corporation does not permit any of this data network wiring to be cut or jointed. If any of these wires are accidentally cut, they may be temporarily repaired in the usual way, but the complete wiring harness must be changed as soon as possible.

The high speed 250 kbit/s SAE J1939 and C-bus networks have 120Ω terminating resistors at their ends.

Control unit architecture

Each control unit has a broadly similar internal architecture. Taking the CECM-C as an example, it contains a microprocessor, and EEPROM for storing parameters and to act as an error code memory, and a FLASH EPROM for program memory.

There are interfaces to handle the SAE J1708 and SAE J1939 and C-bus signal protocols, and converters at the inputs and outputs to carry out analog/digital and digital/analog conversion as required.

Binary logic levels

Databus	Logical 0	Logical 1
SAE J1708	Gray 0V Orange 5V	Gray 5V Orange 0V
SAE J1939	Yellow 4V Green 1V	Yellow 2.5V Green 2.5V
C-bus	Blue 4V Black 1V	Blue 2.5V Black 2.5V

Signals and their types

The wire numbers are used to identify the principal signals. These are divided into types, with the following abbreviations:

ANI	Analogue input
ANO	Analogue output
DPI	Digital pulse input
DPO	Digital pulse output
ECS +5V	Precision +5V supply to ECS height sensors
ECS 0V	Precision 0V supply to ECS height sensors
GND	Ground
HDI	High digital input
HDO	High digital output
PI	Pulse input
PO	Pulse output
PWM	Pulse width modulated
VV	Variable voltage, such as from panel lamps rheostat
"+"	Direct battery feed
"+30"	Battery feed via main switch
"+15"	Battery feed via feed or key switch

A **high digital input** signal is received from a switch or contact that closes to +24V to activate the signal. The signal is considered active if its voltage exceeds 75% of the battery voltage, i.e. if it is over 18V, and inactive if the voltage is lower than this.

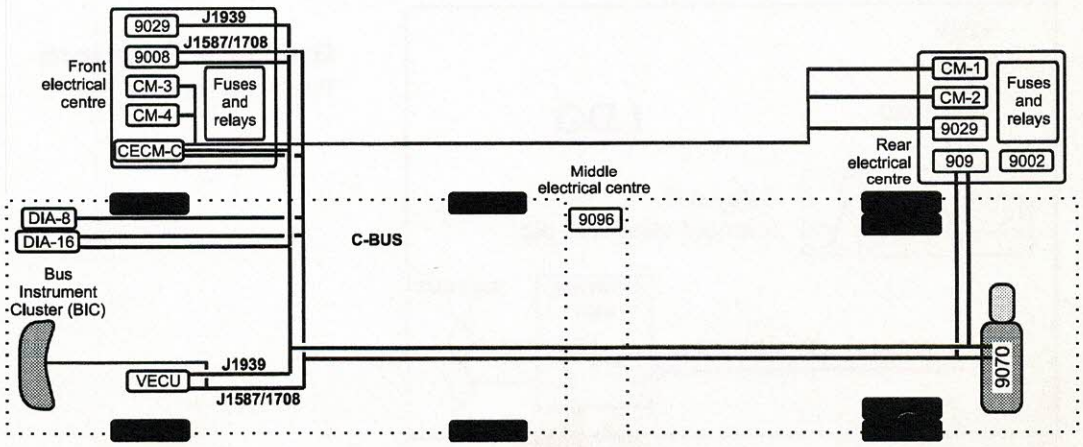

Principal components and networks in B7L articulated pusher buses (refer also to the description on page 1)

A **high digital output** signal is active when it transmits a voltage level exceeding 75% of the battery voltage, i.e. if it is over 18V, and inactive if the voltage is lower than this. Note that certain HDO signals are limited to a maximum of 150 mA output current, so that they have to drive consumers via external relays.

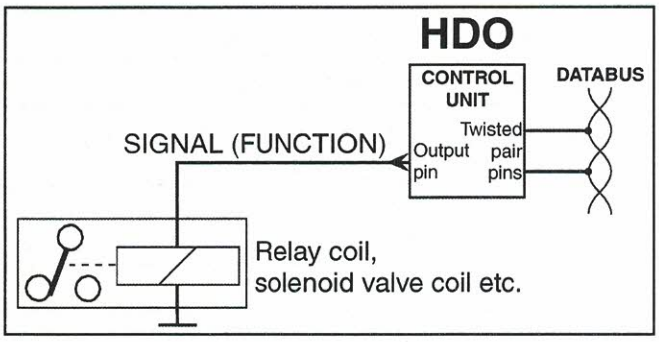

A **low digital input** signal is received from a switch or contact that closes to ground (battery negative) to activate the signal. The signal is considered active if its voltage is below 25% of the battery voltage, i.e. if it is under 6V, and inactive if the voltage is higher than this. This type of signal is often used to activate an external relay coil.

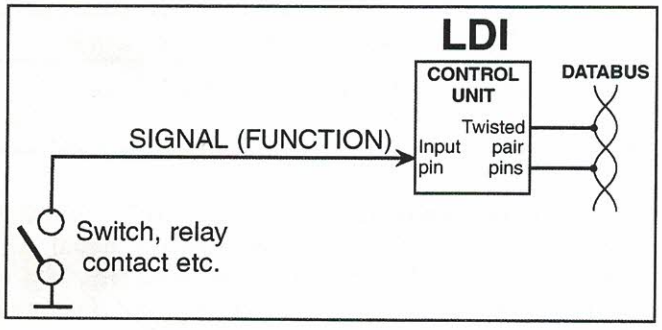

A **low digital output** signal is active when it transmits a voltage level below 25% of the battery voltage, i.e. if it is under 6V, and inactive if the voltage is higher than this.

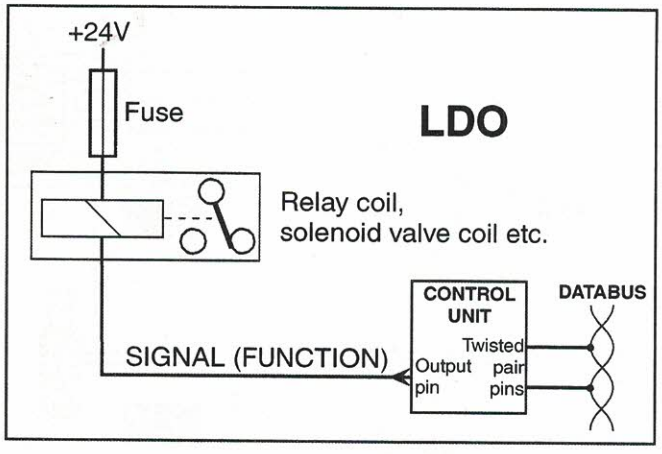

Instrument panel display menus

The following menus are available via the multi-function display switches on the right-hand stalk. The information is displayed on the left hand side of the Bus Instrument Cluster, see also Schematic FA:

Group A – Driving

Gauge mode
Ambient temperature
Engine oil temperature
Automatic transmission oil temperature
Battery voltage
Fuel
Fuel consumption
Trip fuel
Clock/distance
Clock
Clock alarm
Trip odometer
Average speed

Group B – Settings

Language selection
Metric/Imperial units
Clock am/pm or 24 hour
Display contrast
Display backlighting
Night-time display (reversed)
Engine speed limit
Road speed limit
Fuel economy target
Ammeter calibration
Fleet identification input

Group C – Diagnostics

Electronic Control Unit diagnostics
Instrument cluster self-test
Electronic Control Unit data
Electronic Control Unit status test

Group E – Data logging

Vehicle identification
Totals
Trip
Reset trip data

Group F – Password

Password access

Connections between chassis and body

Pin	Signal	Function	From/To	Schematic	Type
BB1:1	1030BB	Accel. pedal idle position output (engine idling)	Control Module CM-4:14	DC	HDO
BB1:2	186BB	Start disable input	Control Module CM-4:8	EC	LDI
BB1:3	254BB	Fire warning input from body	Control Module CM-4:7	KA	HDI
BB1:4	3000BB	Low priority power output	CECM-C pin A6	DD	LDO
BB1:5	543BB	Luggage door open input	Control Module CM-4:17	CA	LDI
BB1:6	5032BB	Seat belt warning input	BIC (702CTR) pin E4 or CY1	FB, FD	LDI
BB1:7	216BB	Brake lights output to body relay (308)	Pressure contact (216) pin 2	GD	HDO
BB1:8	2068BB	Washer level low input	Control Module CM-4:18	CA	LDI
BB1:9	660BB	Alternator charging/engine running output	Control Module CM-4:11	EB	HDO
BB1:10	9002LC	Enable ECS lowering	Control Module CM-3:10	JA	HDO
BB1:11	200BB	Parking brake engaged output	Control Module CM-4:12	KB	HDO
BB1:12	253BB	Reversing lights output	Control Module CM-4:13	CA	HDO
BB2:1	7058A	Indoor temperature signal input	Control Module CM-4:1	CA	AN
BB2:2	7058G	Indoor temperature ground	Control Module CM-4:22	CA	GND
BB2:3	7059A	Outdoor temperature signal input	Control Module CM-4:2	CA	AN
BB2:4	7059G	Outdoor temperature ground	Control Module CM-4:23	CA	GND
BB2:6	150DB	Start/Drive	Key or feed switch "Drive"	EC	HDO
BB2:8	8B	"+" output feed to horn	Fuse F8, front el. centre	KC	" + "
BB2:9	223BB	Horn ground when operated	Horn button (223)	KC	LDO
BB2:10	199C	Destination sign lighting output	Feed switch (199) pin 2	EC	HDO
BB2:11	180BB	"+" output on emergency switch (180) operation	Emergency switch (180) pin 1	EA	HDO
BB2:12	6C	4 pulses/metre output	BIC (702CTR) pin C6	FB	P
BB3:1	422A	Direction indicators front left signal output	Electronic relay (323) pin 5	GC	P
BB3:2	423A	Direction indicators front right signal output	Electronic relay (323) pin 11	GC	P
BB3:3	31EL	Direction indicators front ground	Ground	GC	GND
BB3:4	426A	Direction indicators rear left signal output	Electronic relay (323) pin 7	GC	P
BB3:5	427A	Direction indicators rear right signal output	Electronic relay (323) pin 13	GC	P
BB3:6	31EM	Direction indicators rear ground	Ground	GC	GND
BB3:7	545B	Next stop lamp input	BIC (702RHS) pin RX2	FC	LDI
BB3:8	561B	Perambulator lamp input	BIC (702RHS) pin RX6	FC	HDI
BB3:9	536BB	Rear fog lights input	BIC (702CTR) pin D4 or CY13	FB, FD	LDI
BB3:10	309AB	Parking lights output to relay on body (309)	(100):3 or (101):6	GA	HDO
BB3:11	307A	Headlights low beam output to relay on body (307)	(101):1	GA	HDO
BB3:12	306A	Headlights high beam output to relay on body (306)	(101):3, (101):5	GA	HDO
BB4:1	14RX	3rd lamp from left (spare) input	BIC (702RHS) pin RX14	FC	LDI
BB4:2	29RX	1st lamp from left (spare) input	BIC (702RHS) pin RX29	FC	LDI
BB4:3	30RX	2nd lamp from left (spare) input	BIC (702RHS) pin RX30	FC	LDI
BB4:4	13RX	4th lamp from left (spare) input	BIC (702RHS) pin RX13	FC	HDI
BB4:5	19RX	6th lamp from left (spare) input	BIC (702RHS) pin RX19	FC	HDI
BB4:6	22RX	3rd lamp from left (spare) input	BIC (702RHS) pin RX22	FC	HDI
BB4:7	1115A	Door brake on/off input	CECM-C pin B22	CA, DD	LDI
BB4:8	5SP	Road speed >5 km/h output	Control Module CM-3:12	CA	HDO
BB4:9	546A	Any door open input	Control Module CM-4:3	CA	HDI
BB4:10	20SP	Road speed >20 km/h output	Control Module CM-3:11	CA	HDO
BB4:11	805D1	Dimmer level output 1	Control Module CM-4:15	GA	PWM
BB4:12	805D2	Dimmer level output 2	Control Module CM-4:16	GA	PWM
BB5:1	23B	ECS system power +	Fuse F23, front el. centre	JA	"30"
BB5:2	31ECA	ECS system ground	Ground	JA	GND
BB5:3	9002D	Kneeling position signal output	Control Module CM-3:14	JA	HDO
BB5:4	1102HC	Kneeling interlock	ECS control unit (9002) pin 6	JA	LDI
BB5:5	109C	Hazard warning flashers output	Flasher unit (323) pin 12	GC	P
BB5:6	853BB	Assignable buzzer input	Buzzer (853) pin 6	FE	HDI
BB5:7	462A	Direction indicators left auxiliary lamp output	Flasher unit (323) pin 3	GC	P
BB5:8	463A	Direction indicators right auxiliary lamp output	Flasher unit (323) pin 15	GC	P
BB5:9	508B	Load relief during starting	(185A) or Keyswitch (150) pin 50	EC	HDO
BB5:10	700BB	Road speed (max. 5 amp load)	CECM-C pin A19	CA	P
BB5:11	11B	"30" body feed output	Fuse F11, front el. centre	CA	"30"
BB5:12	26B	"15" body feed output	Fuse F26, front el. centre	CA	"15"
BB6:1	6015C	Door brake switch	Control unit (9008) pin 15:14	IA	HDO
BB6:2	6015B	Door brake switch	Doors solenoid valve (6015) pin 1	IA	HDI
BB7:1	31AC	Engine hatch switch ground	Ground	CA, CCA	GND
BB7:2	1107A	Engine hatch switch input	Control Module CM-3:7	CA	LDI
BB7:3	660C	Aux. relay output for high current body consumers	Control Module CM-1:11	EB	HDO

Typical electrical centres

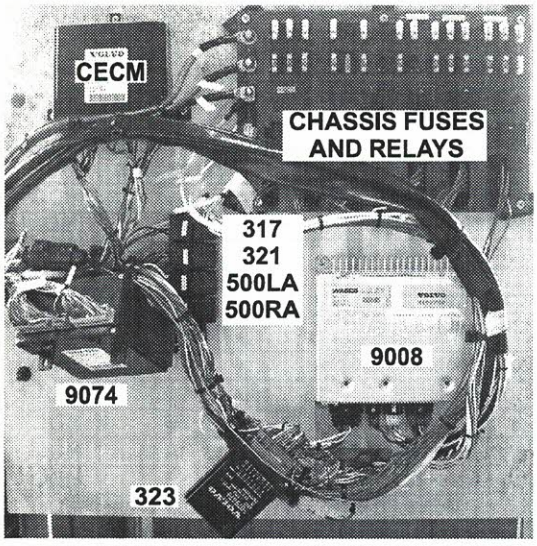

B7L front, as delivered to coachbuilder

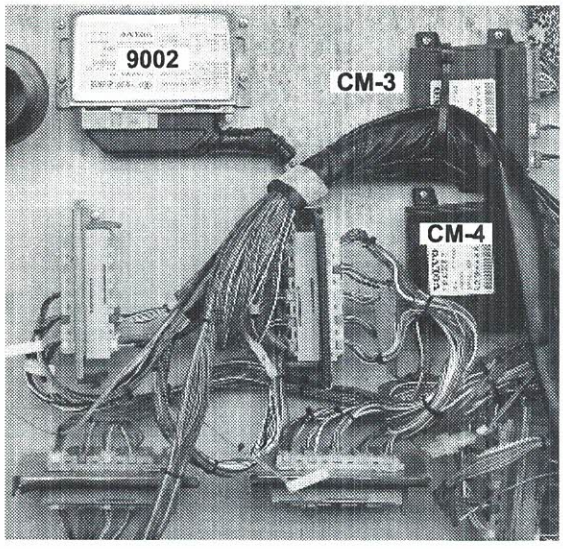

B7L front accessories, as delivered to coachbuilder

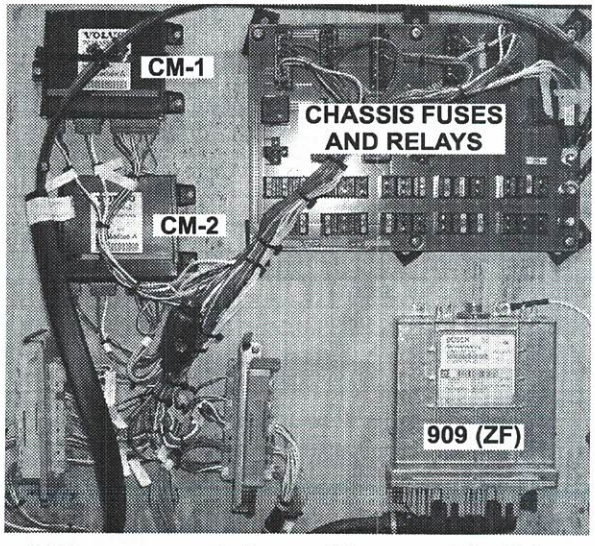

B7L rear, as delivered to coachbuilder

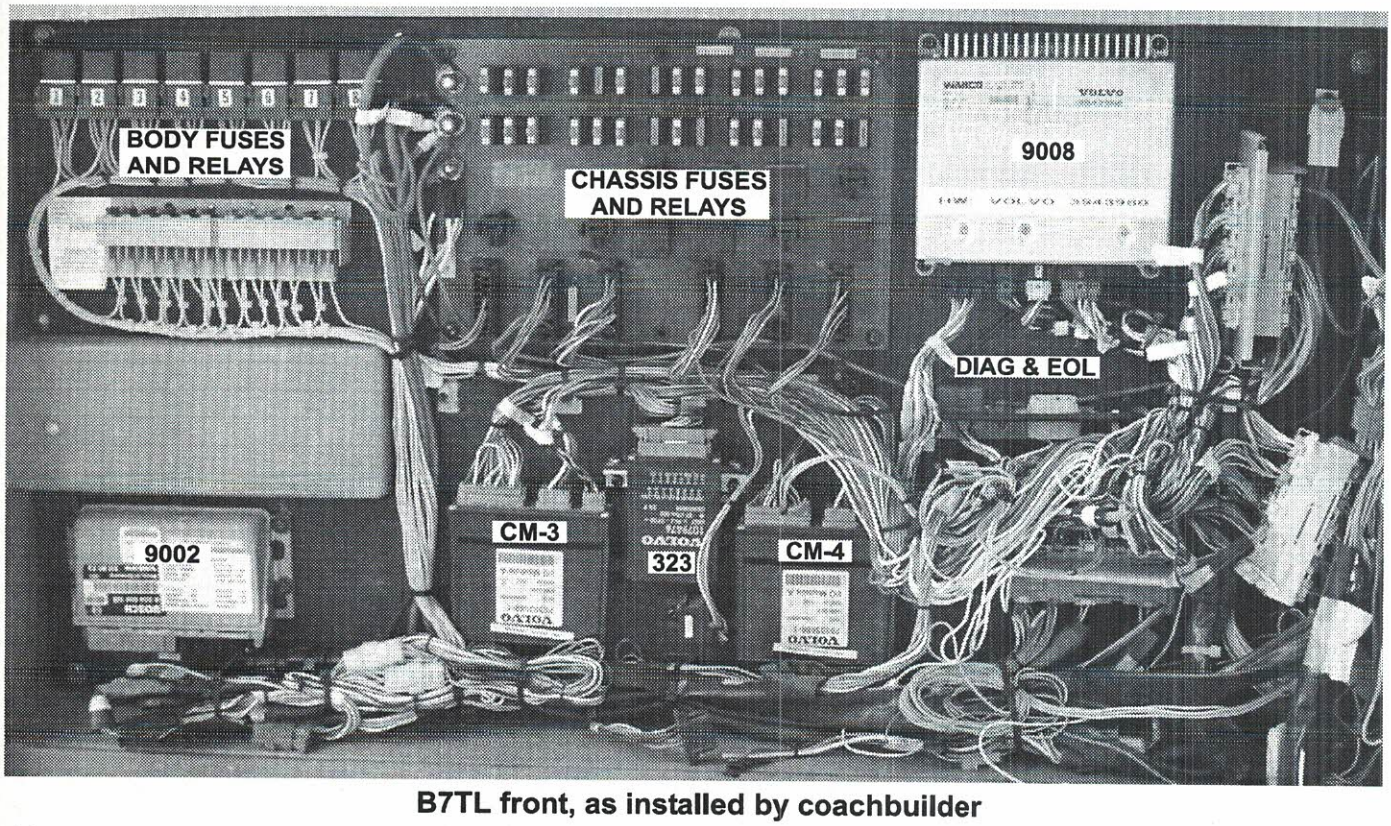

B7TL front, as installed by coachbuilder

D7C engine component locations

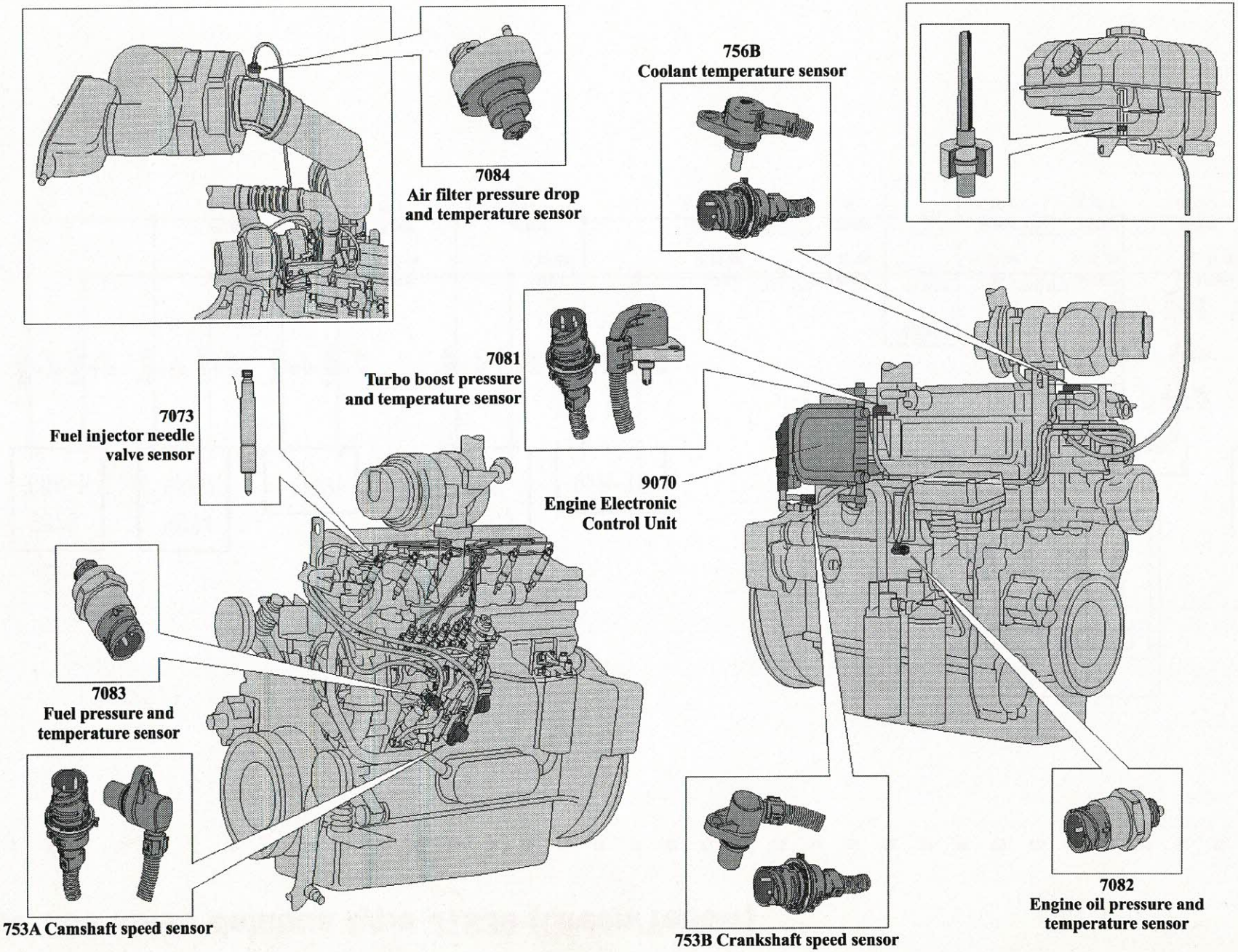

BA 250 kbit/s databus type J1939 (Green/Yellow)

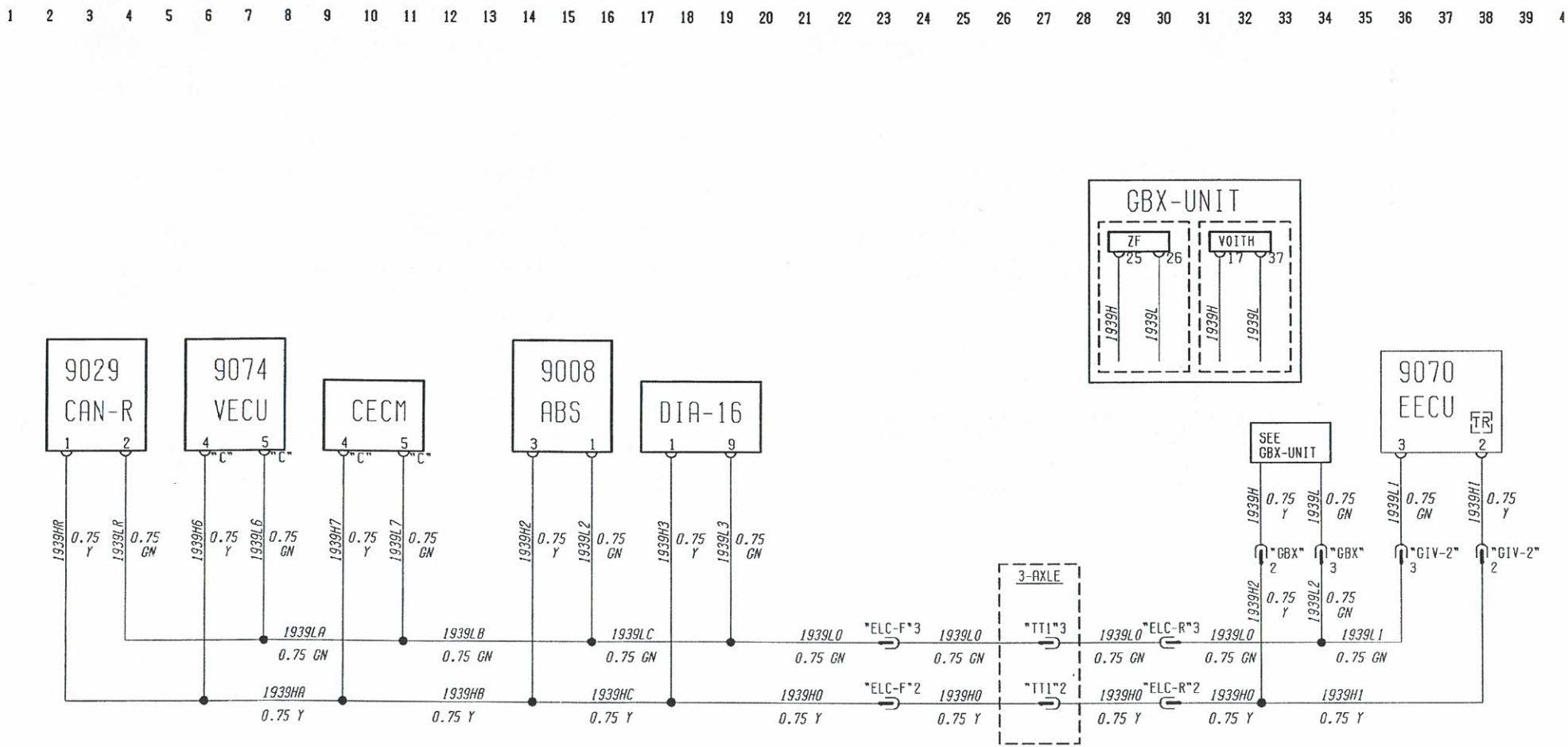

BB 9600 bit/s databus type J1587/1708 (Gray/Orange)

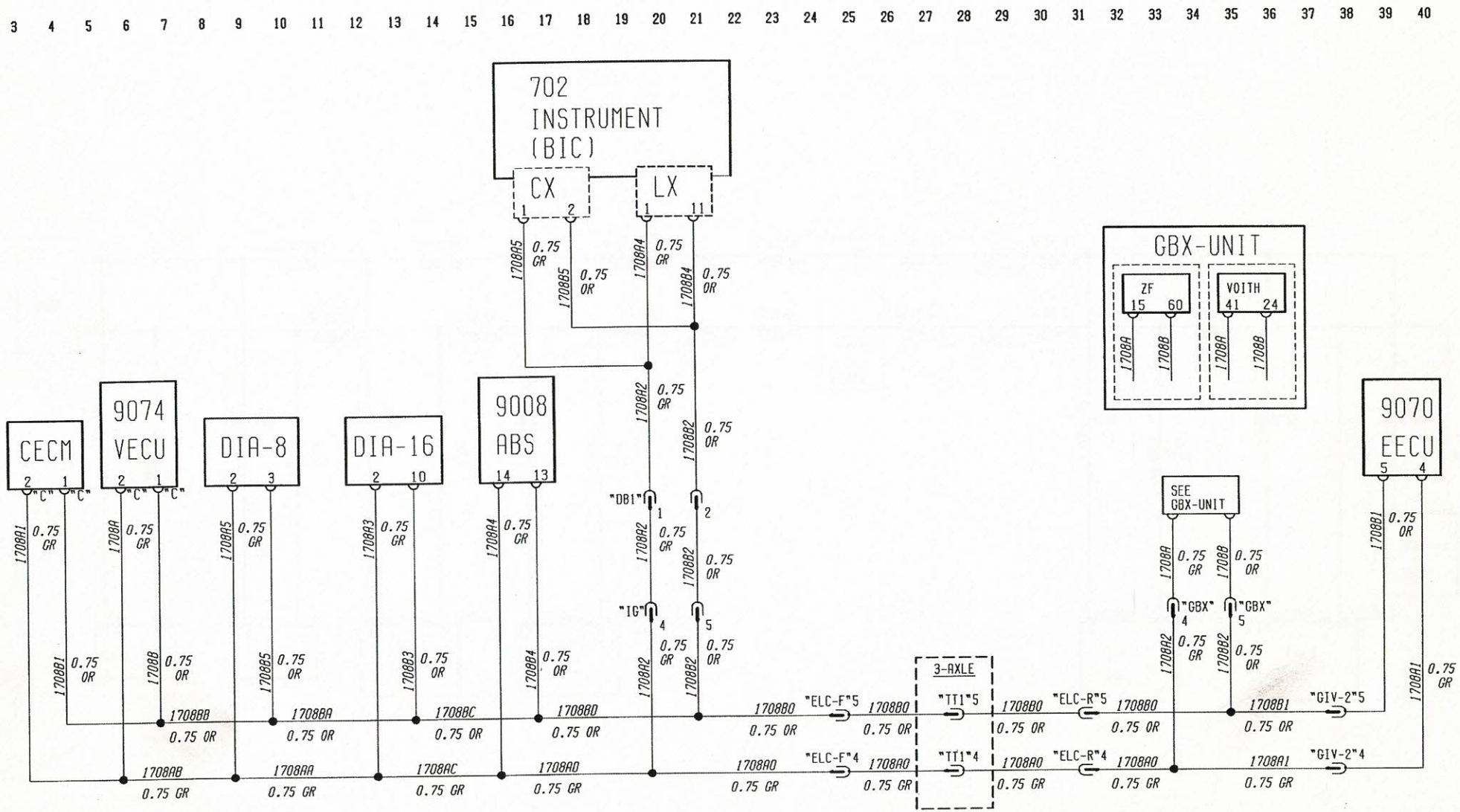

BC 250 kbit/s C-bus (VOLCANO databus) (Blue/Black)

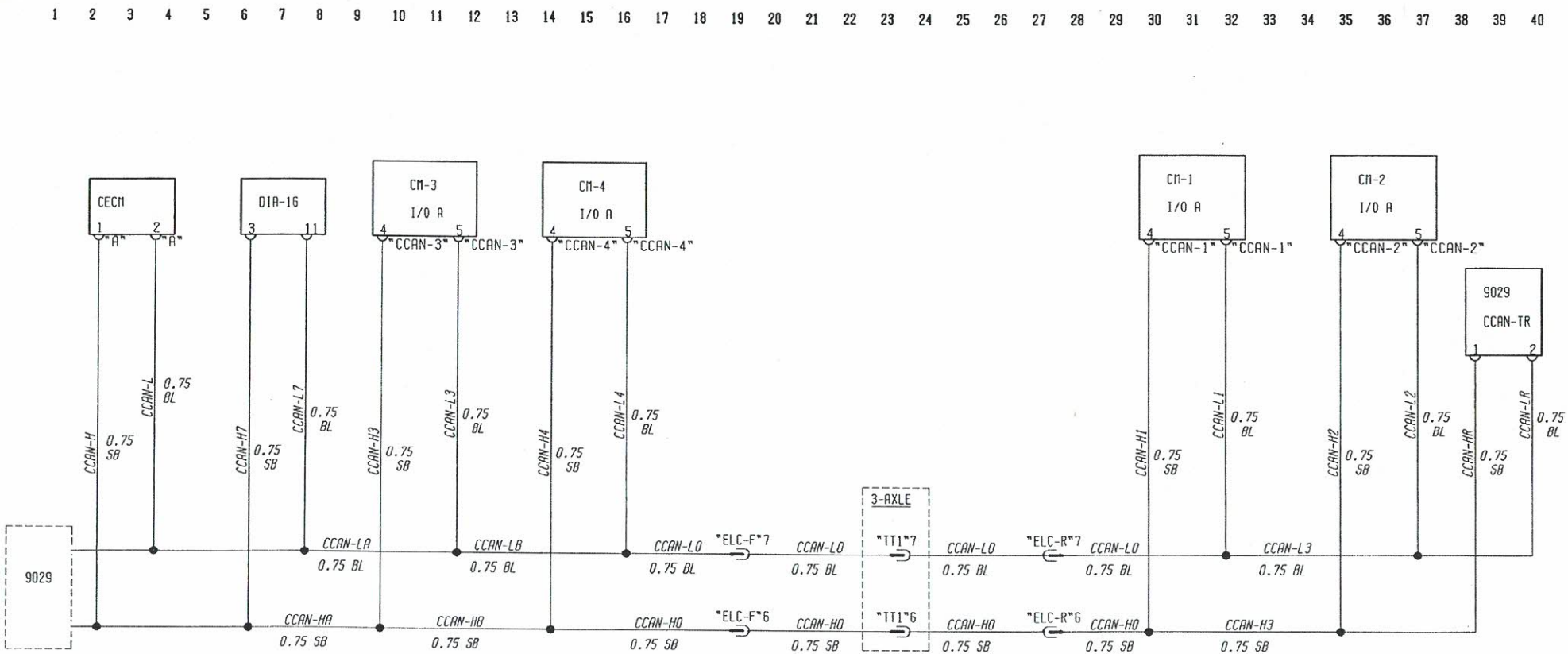

CA Body connection diagrams

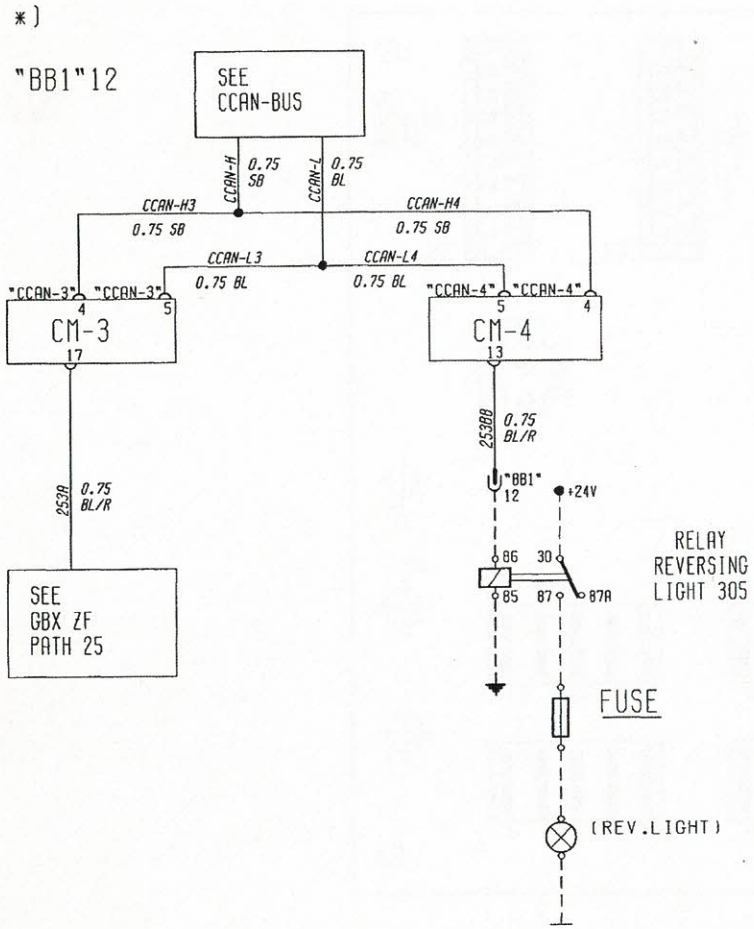

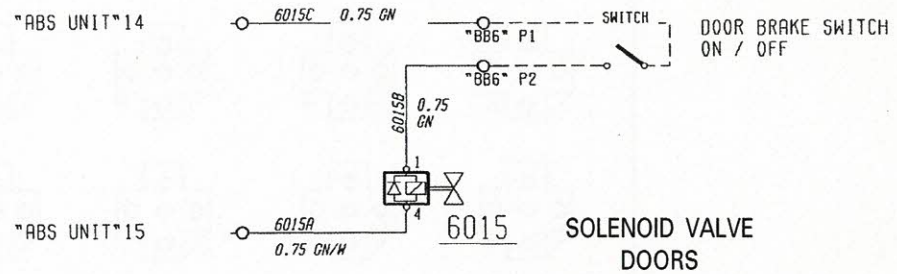

REAR

"BB7" P1	31AC	0.75 W	"32" -	GND
"BB7" P2	1107A	0.75 BL/Y	"CMA-3"7	ENGINE DOOR SWITCH
"BB7" P3	660C	0.75 Y/R	"CMA-1"11	ALTERNAOR CHAGING

CB Fuse and relay printed circuit cards

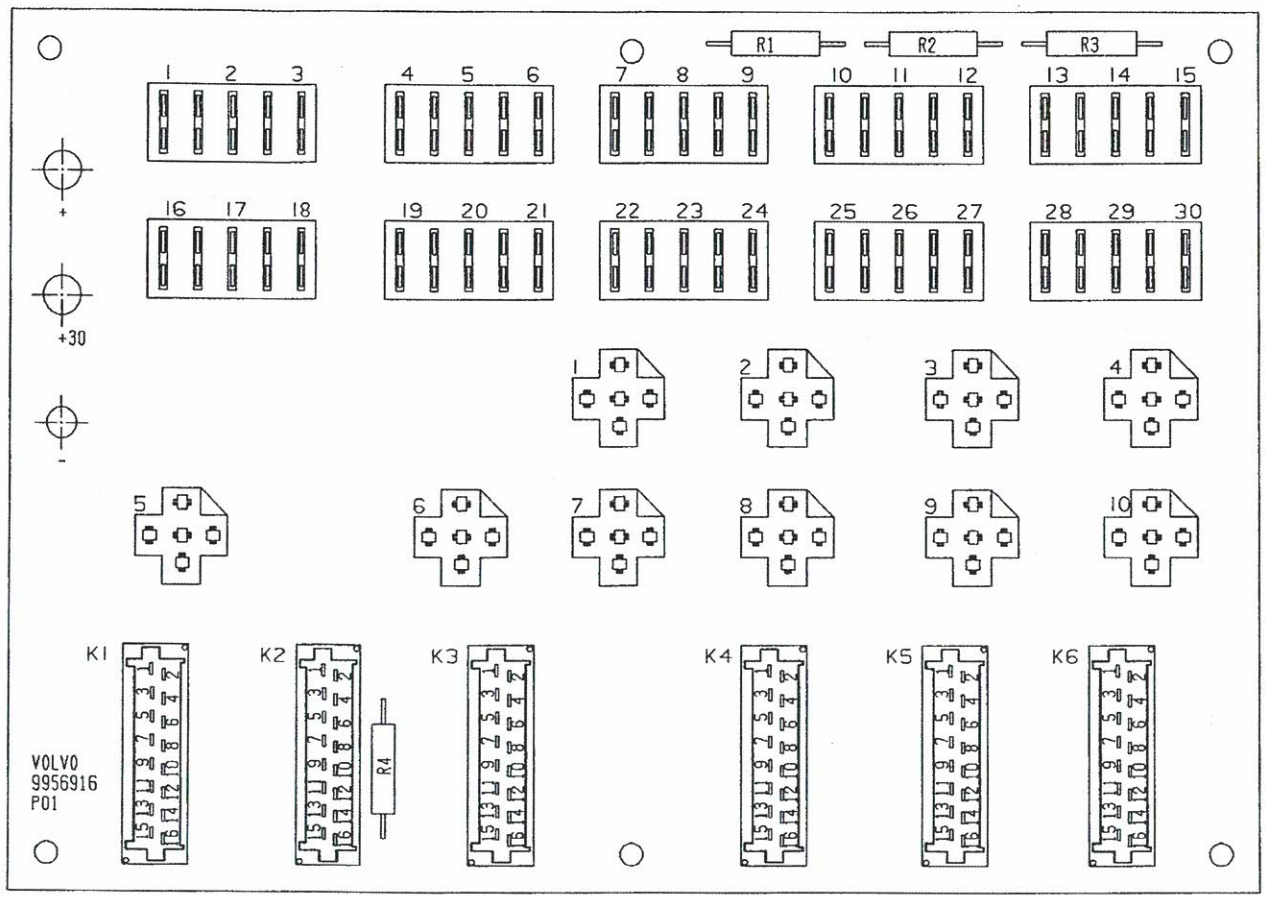

DA Control modules power supply

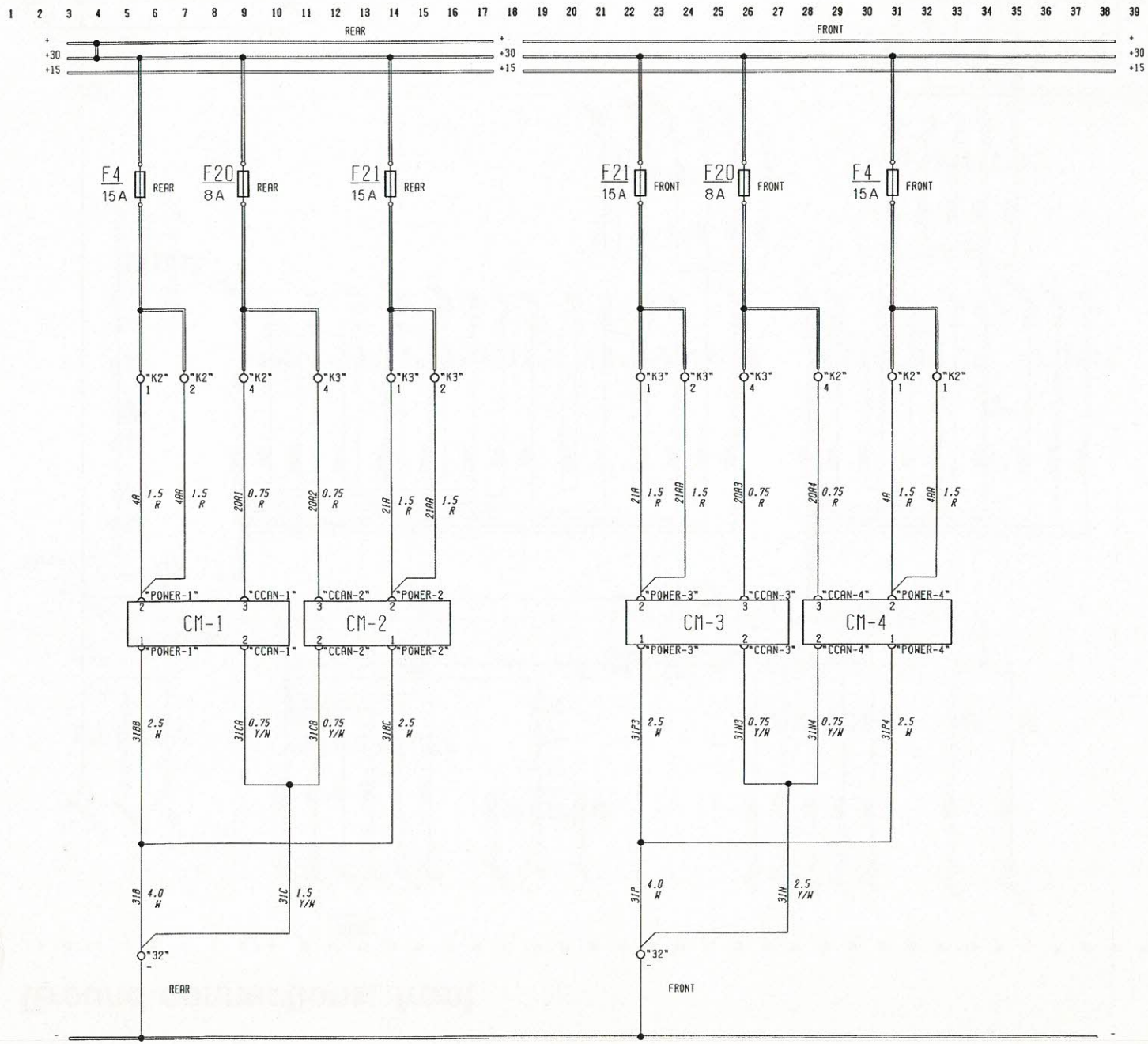

CC Ground connections, front

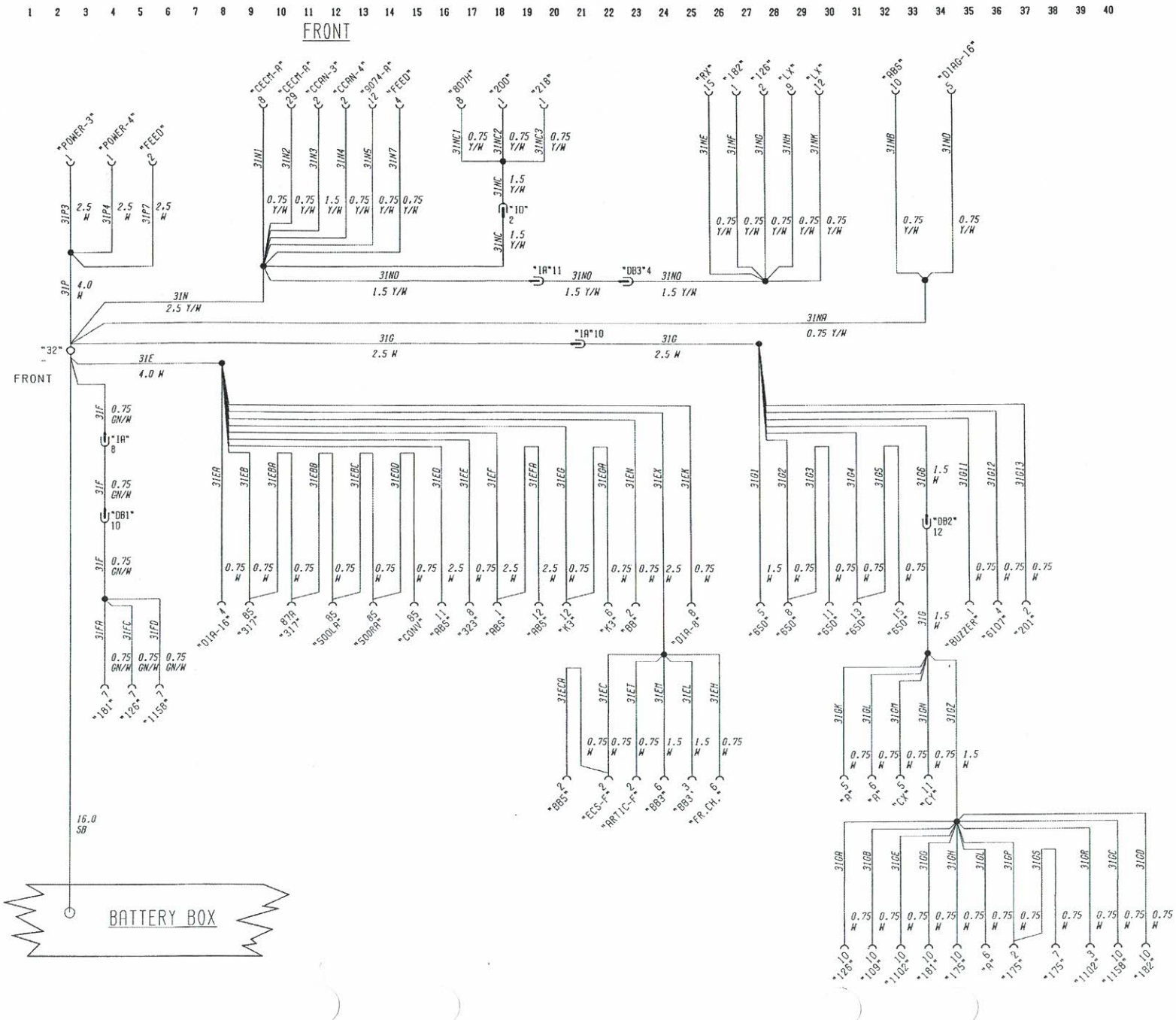

CCA Ground connections, rear

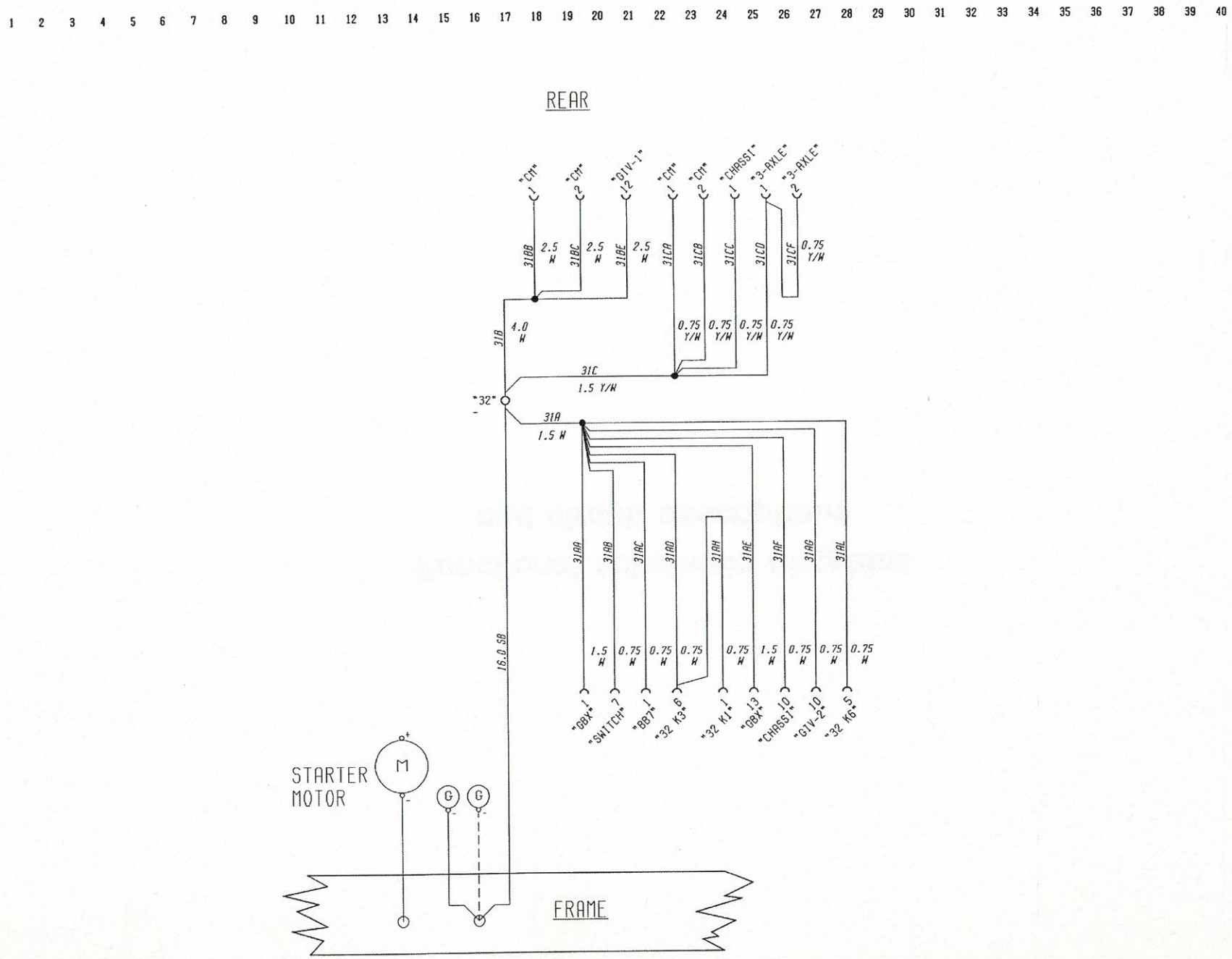

Functional schematic diagrams and circuit descriptions

B7TL Double-deck buses – Cooling fan hydraulic oil sensors

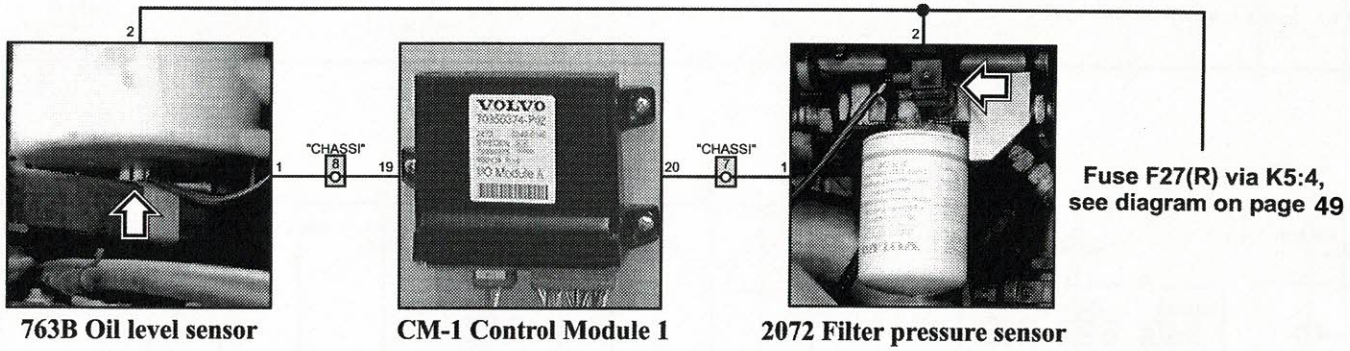

B7TL double-deck buses only.
Details of cooling fan hydraulic oil sensors.
Refer also to the diagram on page 49.

DB17-litre engine control unit (9070), B7L buses

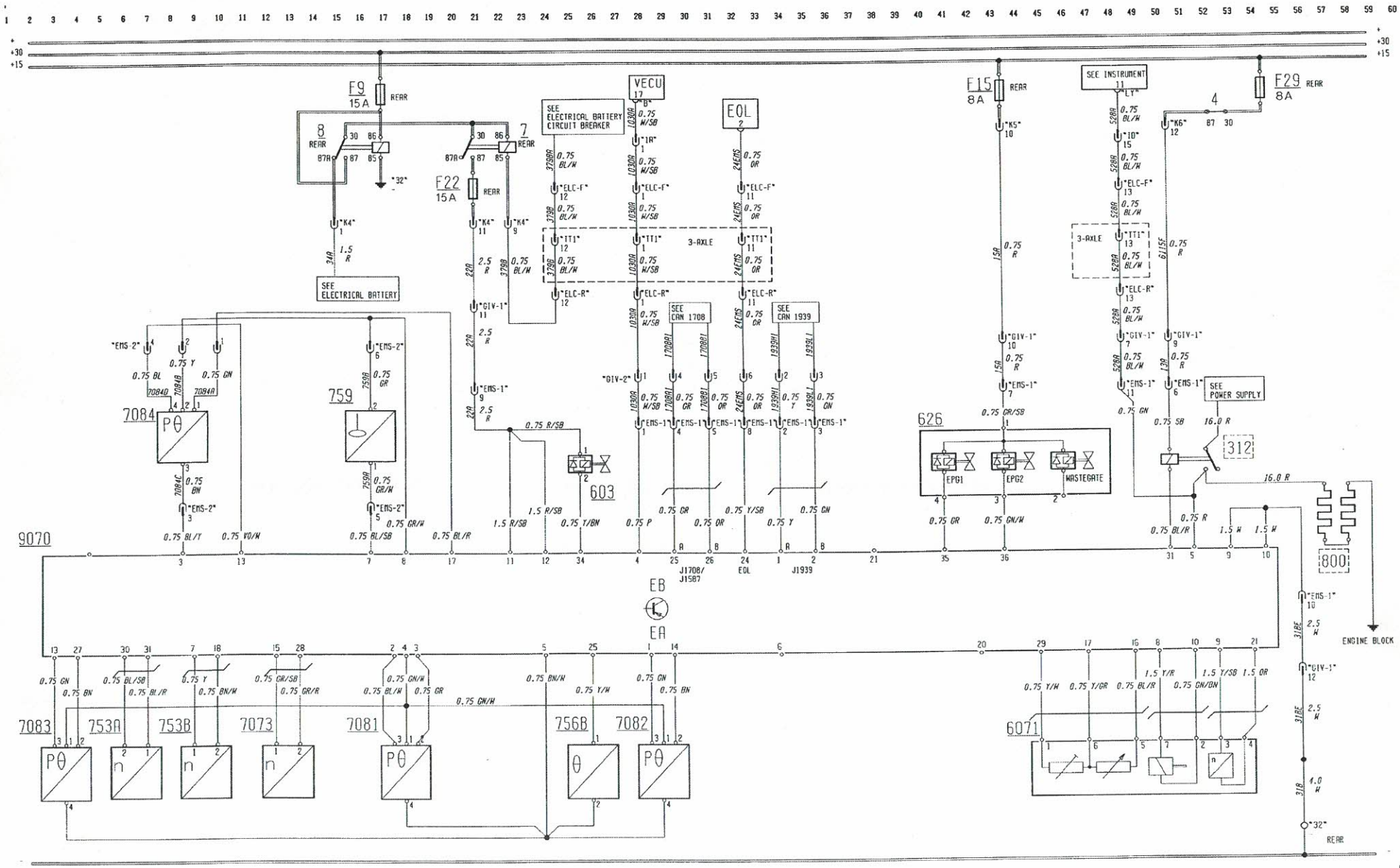

Fuses and relays in rear electrical centre

Fuse	Rating	Circuit protected by fuse
F9	15A	Engine run relays
F15	8A	Exhaust gas pressure solenoid valves
F22	15A	Engine control unit and Engine stop solenoid valve
F29	8A	Starting heater relay

Relay	Circuit
RL7	"+30" feed to engine control unit and engine stop solenoid valve
RL8	"+30" feed to RL7(R)

No.	Component
312	Starting heater relay
603	Engine stop solenoid valve
626	Exhaust gas pressure solenoid valves
753A	Engine camshaft speed sensor
753B	Engine crankshaft speed sensor
756B	Coolant temperature sensor
759	Coolant level sensor
800	Starting heater element
6071	Fuel injection pump
7073	Fuel injector needle valve sensor
7081	Turbo boost pressure and temp. sensor
7082	Engine oil pressure and temp. sensor
7083	Fuel pressure and temperature sensor
7084	Air filter pressure drop and temperature sensor
9070	Engine electronic control unit (EECU)
9074	Vehicle Electronic Control Unit (VECU)
EOL	End Of Line connector

DB for B7L buses circuit descriptions

Cold starting (see also Schematic EC)

The driver is advised to select engine preheat for cold starting in ambient temperatures below 10°C. Preheat is selected either by turning the key switch (150) to a position between II and III or by turning the feed switch (199) to position C (see Schematic EC). This sends the engine preheat request signal 312A to pin A7 of the VECU high. The request is transferred via the J1587/1708 databus to the engine control unit (9070), which from its pin EB31 energises the starting heater relay (312). This provides high current to the starting heater element (800) and lights the starting heater indicator lamp (528). The heater element remains energised for a length of time determined by the ambient temperature, as signalled by the engine coolant temperature signal value received at (9070) pin EA25 from sensor (756B). When the preheating time has elapsed, the indication lamp (528) is extinguished to show the driver that the engine may be started in the usual way (refer to the Schematic EC circuit description for the starting sequence).

Exhaust gas restriction to warm up engine quickly

To ensure that the engine warms up quickly while producing a cleaner exhaust, the buses are equipped with an exhaust gas pressure regulator system. When the parking brake is on, the engine load is less than 200 Nm, its speed is less than 900 rpm and the coolant temperature is below 75°C, the two exhaust gas pressure regulator valves (626) EPG1 and EPG2 close the exhaust gas regulator. This severely limits the discharge of exhaust gas and produces a counter-pressure which is seen by the engine as extra load. The engine thus warms up more quickly by having to overcome this load, and also emits less white smoke and hydrocarbons. Note that the wastegate, shown in the schematic diagram, is not installed in B7L buses.

Normal driving

During normal driving, the accelerator pedal position from sender (7065) (see Schematic DC) is received at pin PB8 on the VECU and transferred via the J1587/1708 databus to (9070), which thus controls the fuel injection pump (6071). A fuel injector needle valve sensor (7073) tells the control unit the actual instant of injection, which is compared with the programmed desired instant of fuel injection (the alpha value). The alpha value is changed as necessary by the program to achieve the correct injection timing to suit the load conditions and emission requirements. The other engine performance and operating conditions are monitored by appropriate sensors (753A), (753B), (756B), (759), (7081), (7082), (7083) and (7084) to provide information which is processed by the control unit (9070) and in appropriate circumstances warns or informs the driver.

Engine stop solenoid valve

The engine stop solenoid valve (603) must remain energised all the time the engine is running, as it blocks the pneumatic supply to the stop system. When normal or emergency stop are activated (see Schematic EA or EC), control unit (9070) pin EB34 goes high to de-energise (603), which admits air into the vacuum system to stop the engine.

B7L buses, 7-litre engine control unit (9070) signalling diagram

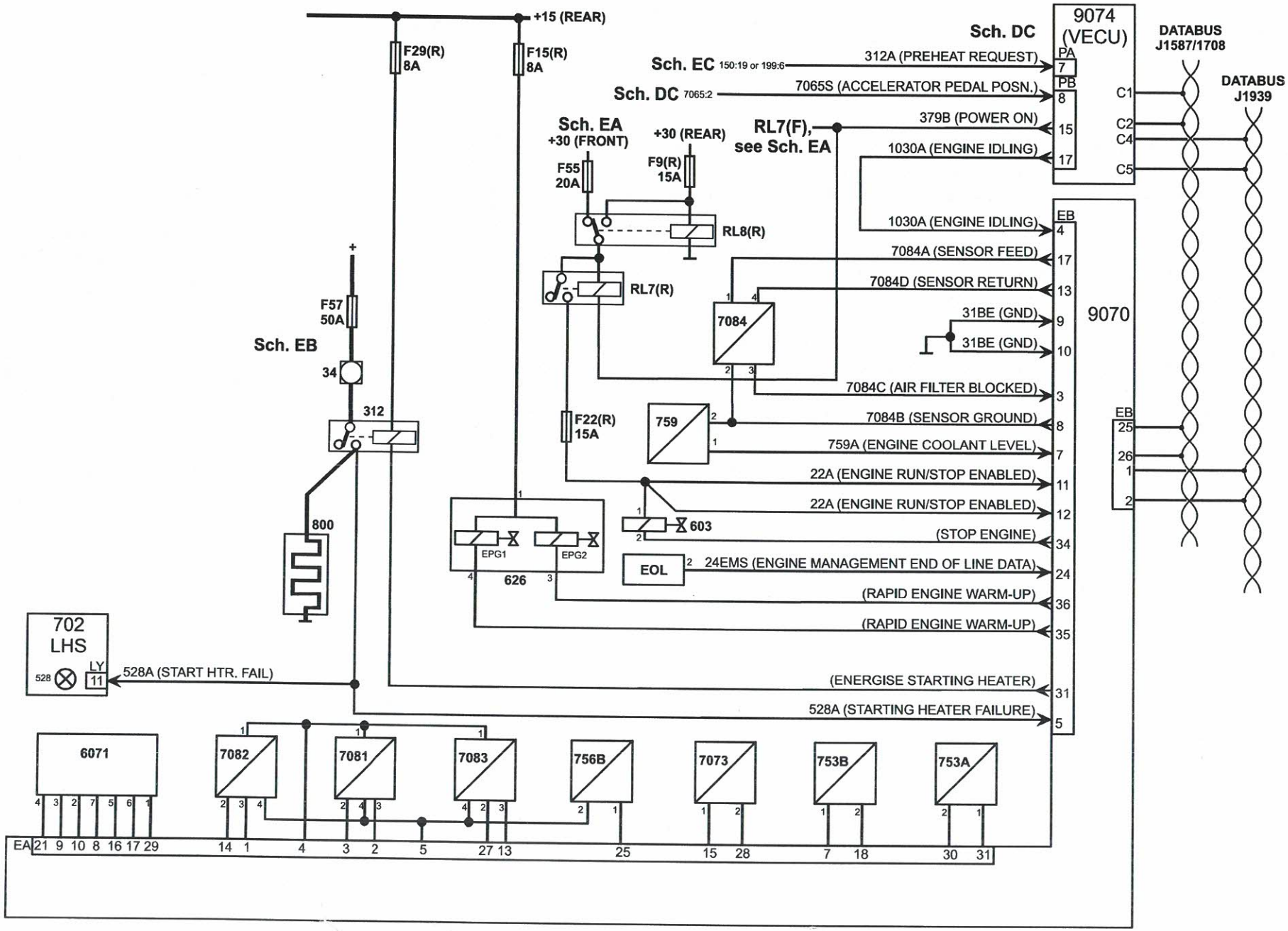

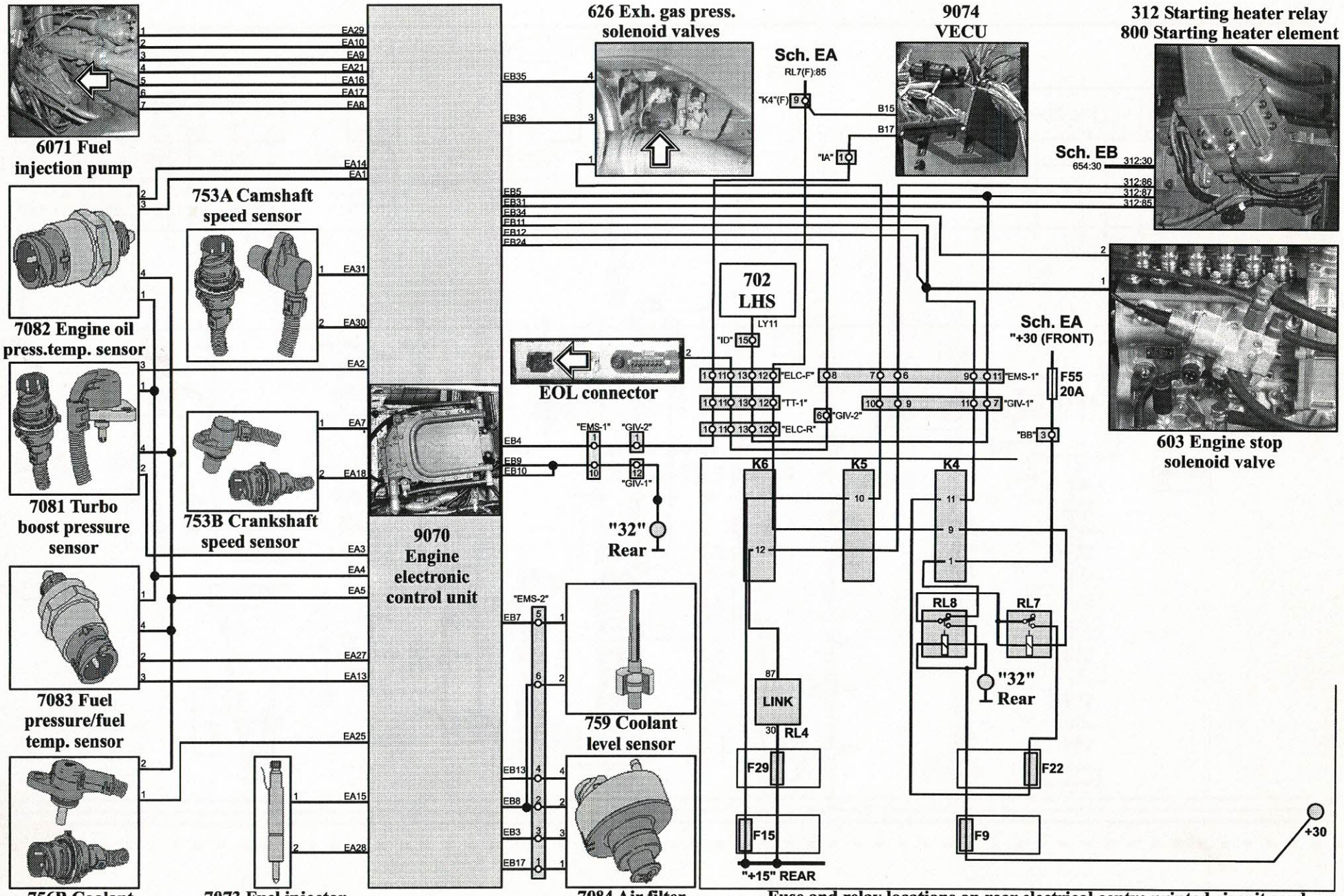

Fuse and relay locations on rear electrical centre printed circuit card

DB27-litre engine control unit (9070), B7TL buses

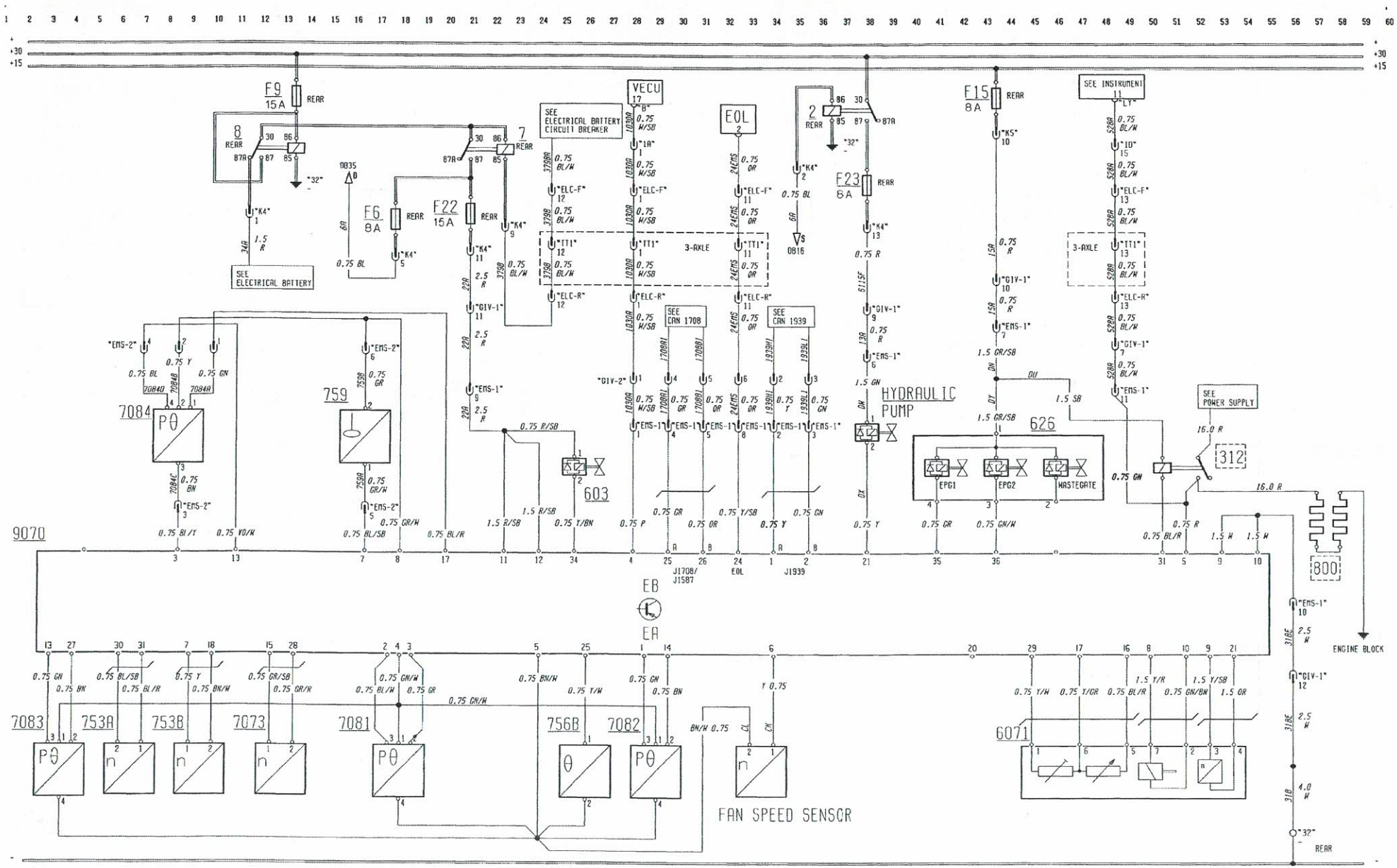

Fuses and relays in rear electrical centre

Fuse	Rating	Circuit protected by fuse
F9	15A	Engine run relays
F15	8A	Exhaust gas pressure solenoid valves
F22	15A	Engine control unit and Engine stop solenoid valve
F29	8A	Starting heater relay

Relay	Circuit
RL7	"+30" feed to engine control unit and engine stop solenoid valve
RL8	"+30" feed to RL7(R)

No.	Component
312	Starting heater relay
603	Engine stop solenoid valve
626	Exhaust gas pressure solenoid valves
753A	Engine camshaft speed sensor
753B	Engine crankshaft speed sensor
756B	Coolant temperature sensor
759	Coolant level sensor
800	Starting heater element
6071	Fuel injection pump
7073	Fuel injector needle valve sensor
7081	Turbo boost pressure and temp. sensor
7082	Engine oil pressure and temp. sensor
7083	Fuel pressure and temperature sensor
7084	Air filter pressure drop and temperature sensor
9070	Engine electronic control unit (EECU)
9074	Vehicle Electronic Control Unit (VECU)
EOL	End Of Line connector
FAN SPEED SENSOR	Cooling fan speed sensor
HYDRAULIC PUMP	Cooling fan hydraulic oil restrictor solenoid valve

DB for B7TL buses circuit descriptions

Cold starting (see also Schematic EC)

The driver is advised to select engine preheat for cold starting in ambient temperatures below 10°C. Preheat is selected either by turning the key switch (150) to a position between II and III or by turning the feed switch (199) to position C (see Schematic EC). This sends the engine preheat request signal 312A to pin A7 of the VECU high. The request is transferred via the J1587/1708 databus to the engine control unit (9070), which from its pin EB31 energises the starting heater relay (312). This provides high current to the starting heater element (800) and lights the starting heater indicator lamp (528). The heater element remains energised for a length of time determined by the ambient temperature, as signalled by the engine coolant temperature signal value received at (9070) pin EA25 from sensor (756B). When the preheating time has elapsed, the indication lamp (528) is extinguished to show the driver that the engine may be started in the usual way (refer to the Schematic EC circuit description for the starting sequence).

Exhaust gas restriction to warm up engine quickly

To ensure that the engine warms up quickly while producing a cleaner exhaust, the buses are equipped with an exhaust gas pressure regulator system. When the parking brake is on, the engine load is less than 200 Nm, its speed is less than 900 rpm and the coolant temperature is below 75°C, the two exhaust gas pressure regulator valves (626) EPG1 and EPG2 close the exhaust gas regulator. This severely limits the discharge of exhaust gas and produces a counter-pressure which is seen by the engine as extra load. The engine thus warms up more quickly by having to overcome this load, and also emits less white smoke and hydrocarbons. Note that the wastegate, shown in the schematic diagram, is not installed in B7TL buses.

Normal driving

During normal driving, the accelerator pedal position from sender (7065) (see Schematic DC) is received at pin PB8 on the VECU and transferred via the J1587/1708 databus to (9070), which thus controls the fuel injection pump (6071). A fuel injector needle valve sensor (7073) tells the control unit the actual instant of injection, which is compared with the programmed desired instant of fuel injection (the alpha value). The alpha value is changed as necessary by the program to achieve the correct injection timing to suit the load conditions and emission requirements. The other engine performance and operating conditions are monitored by appropriate sensors (753A), (753B), (756B), (759), (7081), (7082), (7083) and (7084) to provide information which is processed by the control unit (9070) and in appropriate circumstances warns or informs the driver.

Engine stop solenoid valve

The engine stop solenoid valve (603) must remain energised all the time the engine is running, as it blocks the pneumatic supply to the stop system. When normal or emergency stop are activated (see Schematic EA or EC), control unit (9070) pin EB34 goes high to de-energise (603), which admits air into the vacuum system to stop the engine.

Cooling fan hydraulic system

The speed of the hydraulically-driven cooling fan is sensed by the fan speed sensor, that reports to the control unit (9070) pin EB6. The hydraulic pump delivery pressure and thereby the fan speed are controlled by a PWM signal from (9070) pin EB21 acting on the hydraulic oil restrictor solenoid valve, labelled HYDRAULIC PUMP on the schematic diagram.

B7TL buses, 7-litre engine control unit (9070) signalling diagram

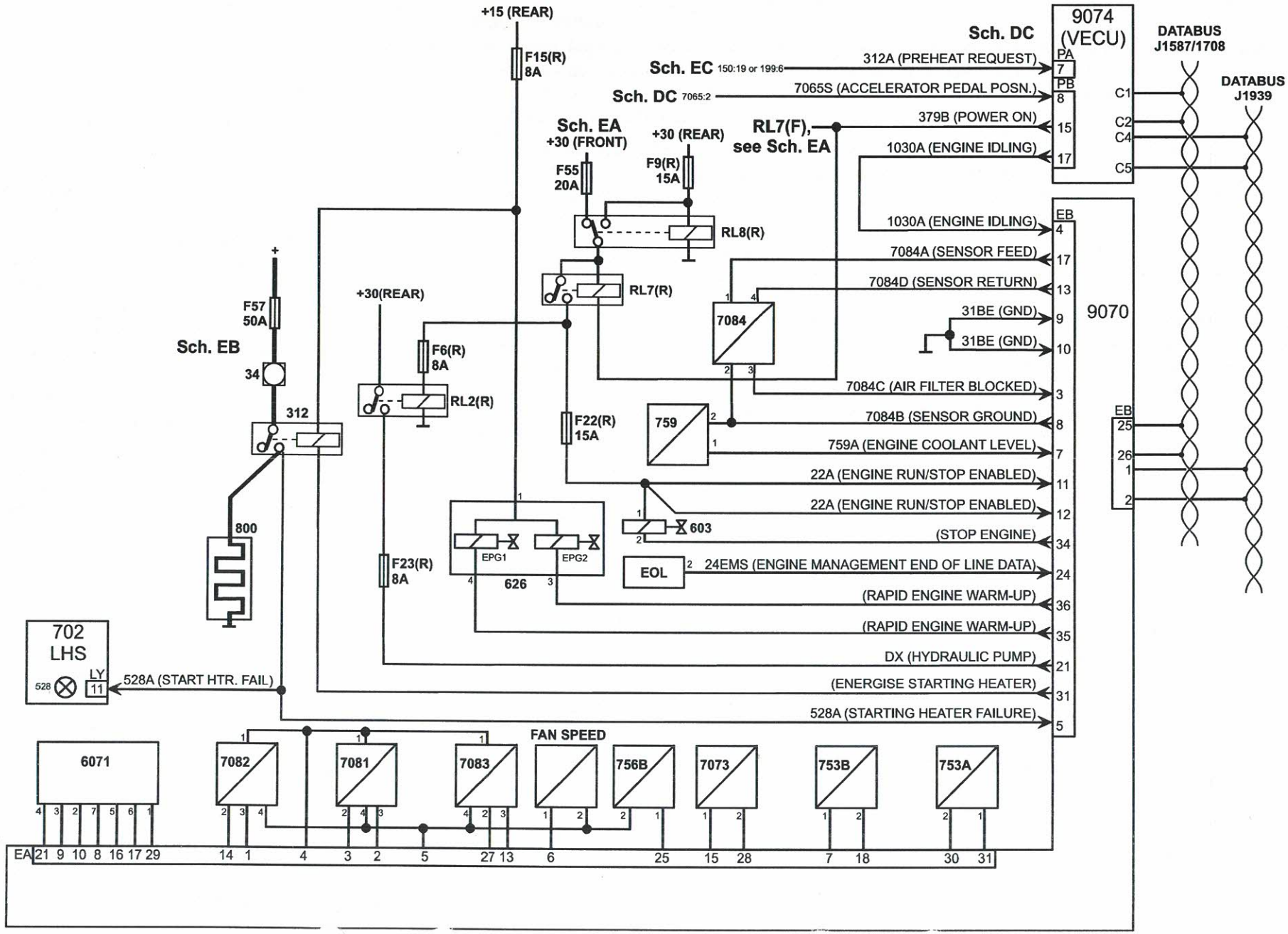

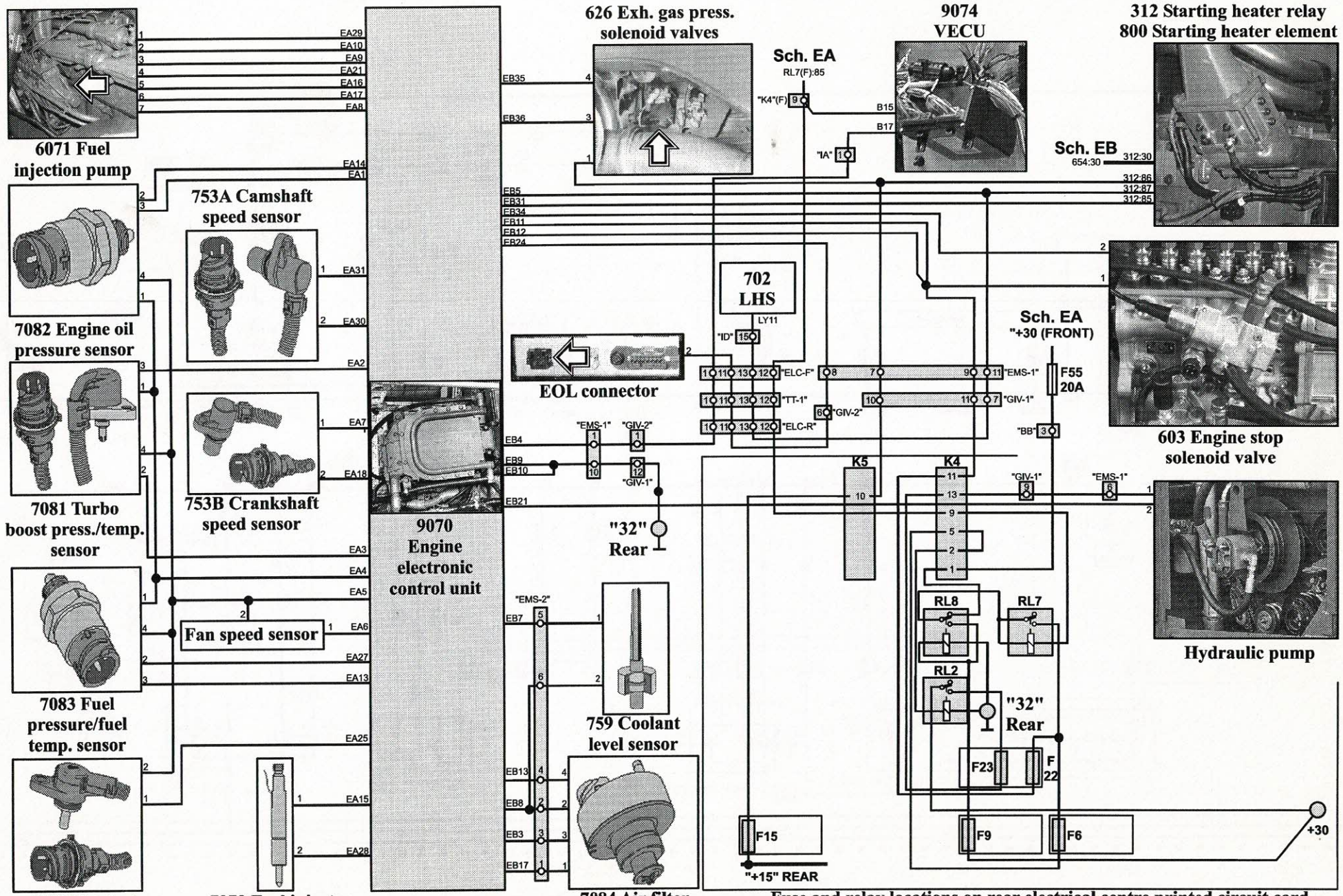
6071 Fuel injection pump
7082 Engine oil pressure sensor
7081 Turbo boost press./temp. sensor
7083 Fuel pressure/fuel temp. sensor
756B Coolant temp. sensor
753A Camshaft speed sensor
753B Crankshaft speed sensor
Fan speed sensor
7073 Fuel injector needle valve sensor
9070 Engine electronic control unit
626 Exh. gas press. solenoid valves
EOL connector
759 Coolant level sensor
7084 Air filter pressure sensor
Sch. EA
RL7(F):85
"K4"(F)
"IA"
9074 VECU
702 LHS
LY11
"ID"
"ELC-F"
"TT-1"
"ELC-R"
"EMS-1"
"GIV-2"
"GIV-1"
"EMS-2"
"32" Rear
K5
K4
RL8
RL7
RL2
F23
F 22
F15
"+15" REAR
F9
F6
+30
312 Starting heater relay
800 Starting heater element
Sch. EB
654:30
312:30
312:86
312:87
312:85
Sch. EA
"+30 (FRONT)
F55
20A
"BB"
603 Engine stop solenoid valve
Hydraulic pump
Fuse and relay locations on rear electrical centre printed circuit card

DC Vehicle Electronic Control Unit (VECU) (9074)

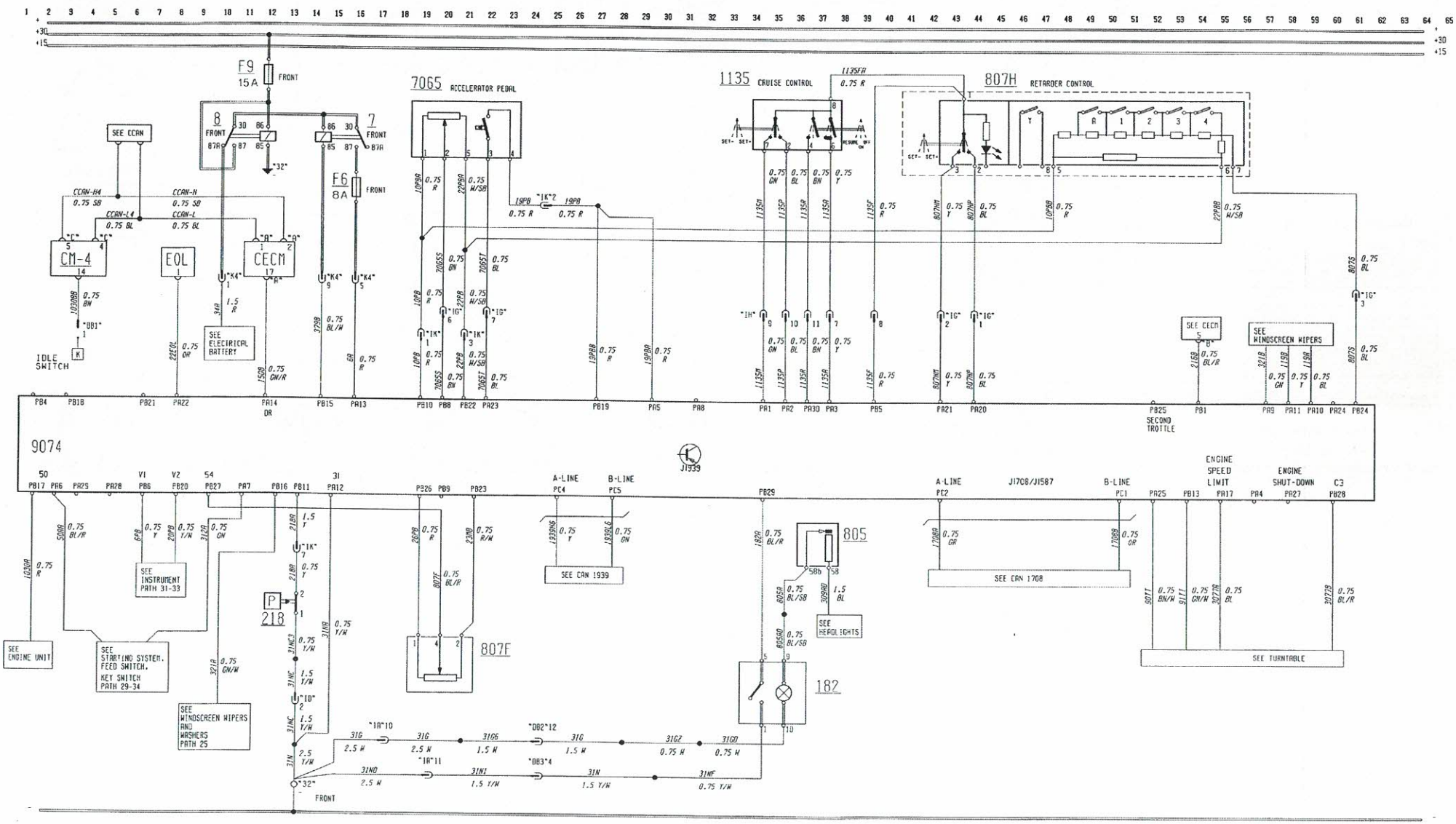

Fuses and relays in front electrical centre

Fuse	Rating	Circuit protected by fuse
F6	8A	Switched "+30" feed to VECU (9074)
F9	15A	"+30" feed to VECU (9074)

Relay	Circuit
RL7	Switched "+30" feed to VECU (9074)
RL8	"+30" feed to VECU (9074)

No.	Component
182	Retarder enable switch
218	Auxiliary parking brake contact
805	Panel lamps dimmer rheostat
807F	Retarder foot control
807H	Retarder hand control
1135	Cruise control switches
7065	Accelerator pedal position sensor
CECM-C	Central Electronic Control Module, chassis
CM-4	Control Module 4
EOL	End Of Line connector

DC Circuit descriptions

Low idle

The cruise control switches (1135) are not used in their original sense for cruise control, but instead may be used to set the low idle speed of the engine. The conditions required for this to be done (reported by the appropriate sensors) are: bus stationary, accelerator pedal released, engine idling, coolant temperature above 45°C, parking brake on and transmission set to neutral. The procedure to adjust the low idle setting is described in the Driver's Handbook.

Idle switch output to body

When the accelerator pedal is fully released, i.e. the engine is idling, an output to the body via connector "BB1" pin 1 is low. As soon as the pedal is depressed, the switch in (7065) closes to connect pin 3 to pin 4 and remove the "accelerator fully released" signal from the VECU (9074) pin PB19. This sends a signal via the J1587/1708 databus, the CECM and the C-bus to Control Module CM-4, which applies +24V via pin 14 to send "BB1" pin 1 high. This can, for example, be used to switch off the interior light near to the driver when leaving a bus stop.

Retarding

When the driver enables the retarder by setting the retarder enable switch (182) to "ON", VECU (9074) pin PB29 is grounded. The retarder demand analog voltage from the hand control (807H) at the VECU (9074) pin PB24 is then recognised by the VECU and sent via the J1587/1708 databus to the transmission control unit (909), which applies retarding (see Sch. HA or HB depending on which automatic transmission is installed, ZF or Voith). During retarding the brake lights are lit, as described in Schematic GD, via the 1939 databus, CECM, C-bus and Control module CM-4 pin 30.

Road speed signal

On articulated buses the digital road speed signal received at pin PB6 from the tachograph or speedometer on (702CTR) (see Schematic FB or FD) is transmitted to the turntable (see Schematic LA) via pin PB28 as a digital "road speed > 5 km/h" switching signal.

Other functions involving the VECU (9074):

Brake lights; refer to Schematic GD

Windscreen and headlights wash/wipe; refer to Schematic GF

Parking brake; refer to Schematic KB

Turntable control; refer to Schematic LA

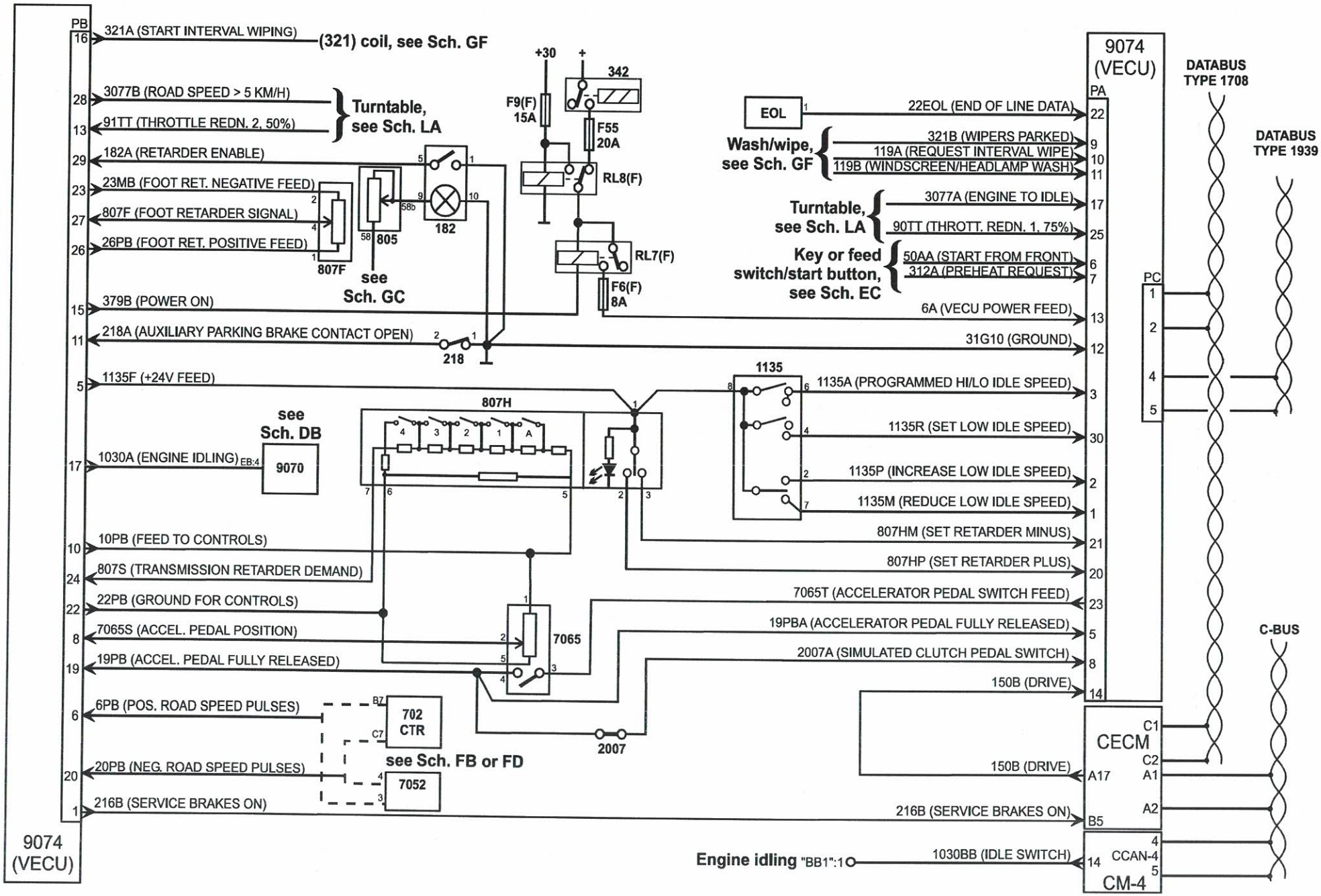
9074 (VECU)
PB
16 321A (START INTERVAL WIPING)
(321) coil, see Sch. GF
28 3077B (ROAD SPEED > 5 KM/H)
13 91TT (THROTTLE REDN. 2, 50%)
Turntable, see Sch. LA
29 182A (RETARDER ENABLE)
23 23MB (FOOT RET. NEGATIVE FEED)
27 807F (FOOT RETARDER SIGNAL)
26 26PB (FOOT RET. POSITIVE FEED)
807F
805
182
see Sch. GC
15 379B (POWER ON)
11 218A (AUXILIARY PARKING BRAKE CONTACT OPEN)
218
5 1135F (+24V FEED)
17 1030A (ENGINE IDLING) EB:4
see Sch. DB
9070
807H
10 10PB (FEED TO CONTROLS)
24 807S (TRANSMISSION RETARDER DEMAND)
22 22PB (GROUND FOR CONTROLS)
8 7065S (ACCEL. PEDAL POSITION)
19 19PB (ACCEL. PEDAL FULLY RELEASED)
7065
6 6PB (POS. ROAD SPEED PULSES)
702 CTR
20 20PB (NEG. ROAD SPEED PULSES)
7052
see Sch. FB or FD
1 216B (SERVICE BRAKES ON)
2007
+30
F9(F) 15A
342
F55 20A
RL8(F)
RL7(F)
F6(F) 8A
1135
EOL
Wash/wipe, see Sch. GF
Turntable, see Sch. LA
Key or feed switch/start button, see Sch. EC
22EOL (END OF LINE DATA)
321B (WIPERS PARKED)
119A (REQUEST INTERVAL WIPE)
119B (WINDSCREEN/HEADLAMP WASH)
3077A (ENGINE TO IDLE)
90TT (THROTT. REDN. 1, 75%)
50AA (START FROM FRONT)
312A (PREHEAT REQUEST)
6A (VECU POWER FEED)
31G10 (GROUND)
1135A (PROGRAMMED HI/LO IDLE SPEED)
1135R (SET LOW IDLE SPEED)
1135P (INCREASE LOW IDLE SPEED)
1135M (REDUCE LOW IDLE SPEED)
807HM (SET RETARDER MINUS)
807HP (SET RETARDER PLUS)
7065T (ACCELERATOR PEDAL SWITCH FEED)
19PBA (ACCELERATOR PEDAL FULLY RELEASED)
2007A (SIMULATED CLUTCH PEDAL SWITCH)
150B (DRIVE)
216B (SERVICE BRAKES ON)
Engine idling "BB1":1
1030BB (IDLE SWITCH)
9074 (VECU)
PA
PC
DATABUS TYPE 1708
DATABUS TYPE 1939
C-BUS
CECM
CM-4
CCAN-4

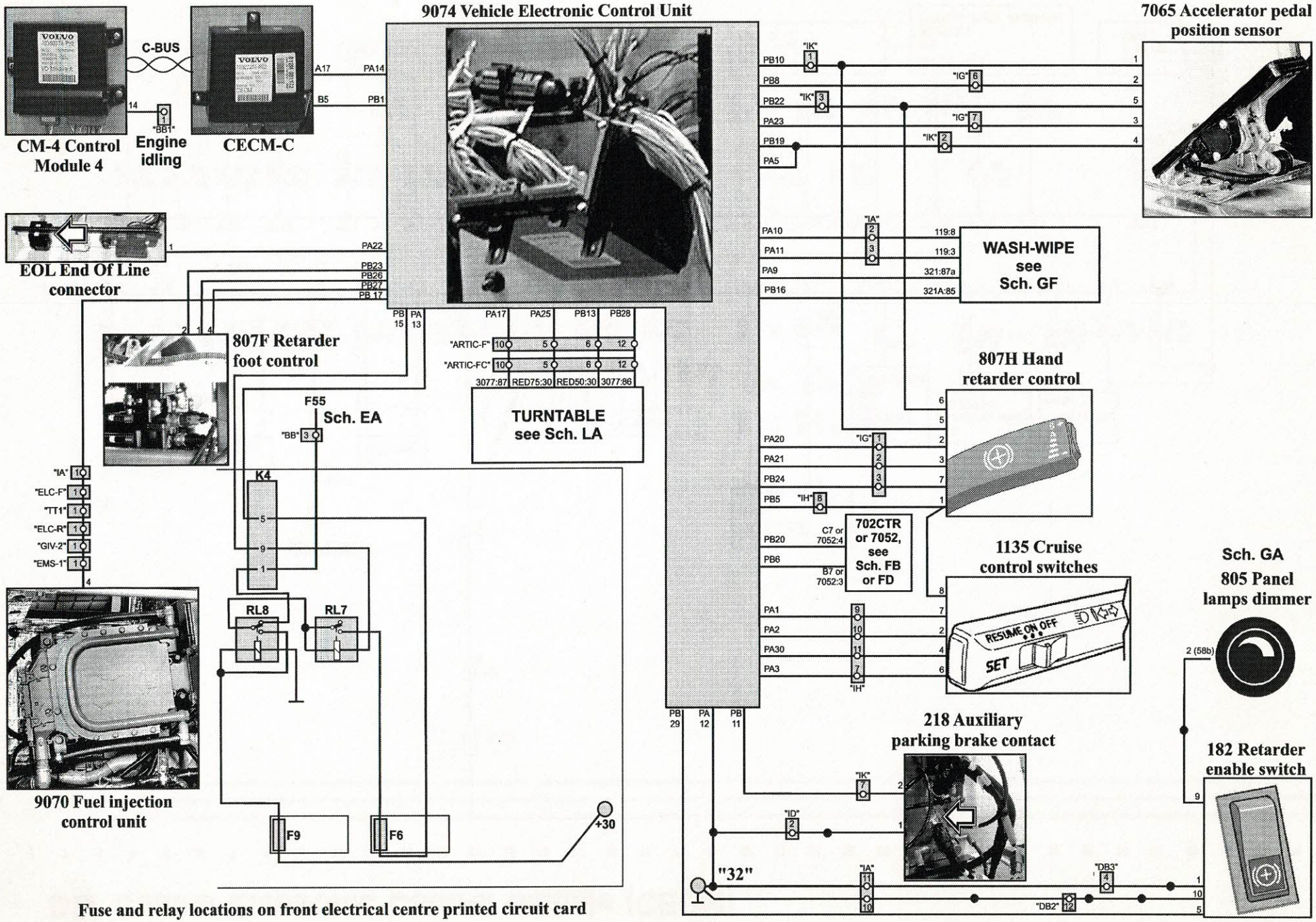

Fuse and relay locations on front electrical centre printed circuit card

DD Central Electronic Control Module (CECM)

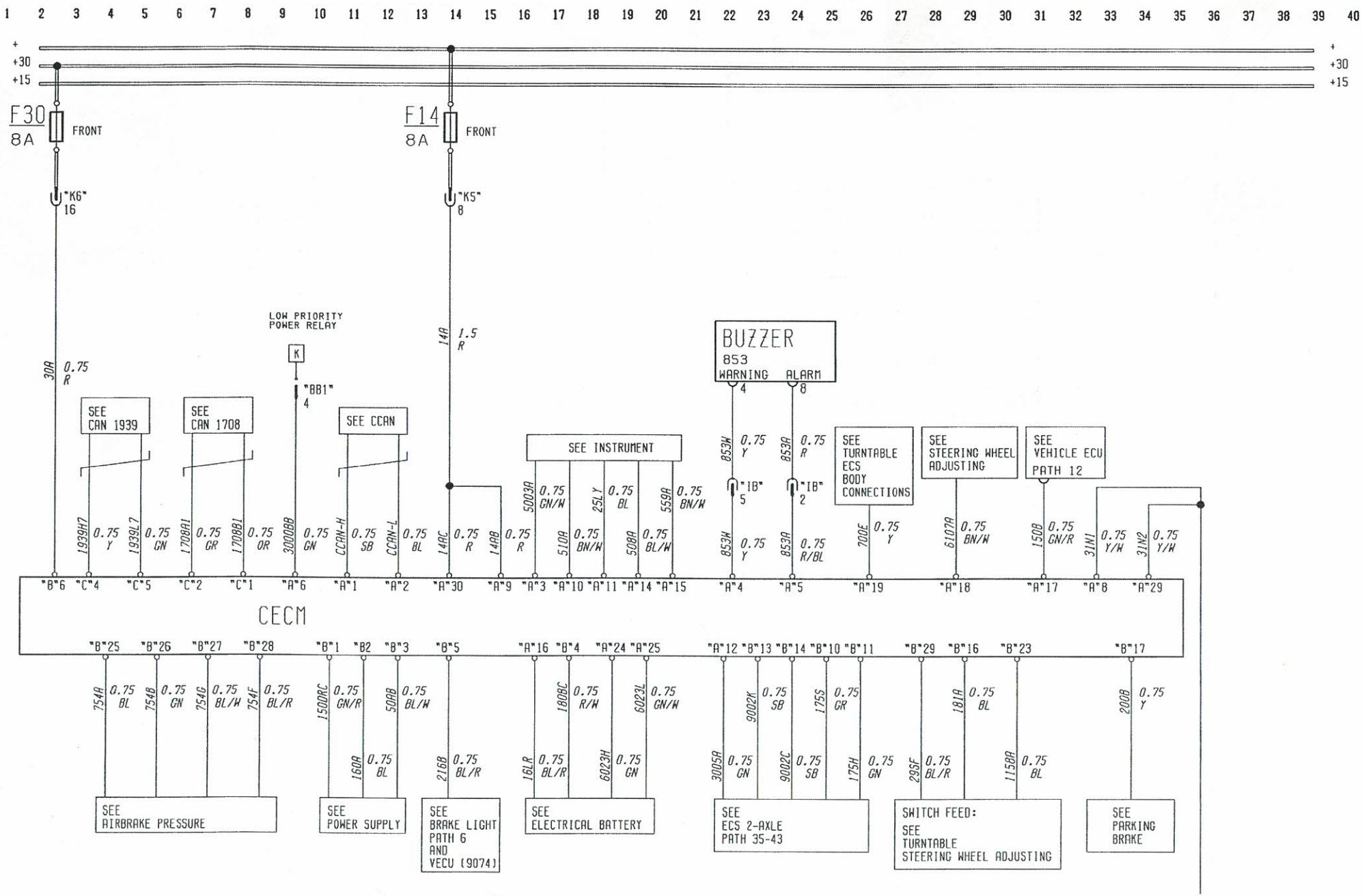

Fuses on front electrical centre card

Fuse	Rating	Circuit protected by fuse
F14	8A	"+" feed to CECM-C
F30	8A	"+30" feed to CECM-C

No.	Component
853	Buzzer

CECM-C Central Electronic Control Module, chassis

DD Circuit descriptions

Power priority

If the battery voltage "+", fed from fuse F14(F) to the CECM-C pins A9 and A30, is sensed by the CECM-C to fall below +22V, pin A6 is switched low. This de-energises the low priority power relay, installed by the coachbuilder, at "BB1" pin 4. This reserves the remaining available battery power for high priority essential consumers, e.g. to ensure that there is enough battery power left to start the engine. The low priority consumers are typically passenger lighting and air conditioning.

Buzzer activation

The external buzzer (853) is activated by the software programs in the case of fire alarm or parking brake off. If the driver switches off the ignition without manually setting the parking brake, the buzzer will "ping" once every 3 seconds.

Engine start and stop

As described in Schematics EA and EC, the engine start and stop functions involve signals that arrive at CECM-C pins B1, B2, B3 and B4 (from emergency switch (180) if installed).

ECS enable

The "+30" feed via relay RL2(F) closed contact that energises the "+61" line for supplying the ECS system will only become available when RL2(F) energises. This is dependent on the signal from CECM-C pin A12, that goes low when the bus engine has started and the alternators are delivering current to the batteries. Refer to Schematic JA for further ECS details.

Brake pneumatic circuit pressures

Front and rear brake pneumatic circuit pressure sensors (754A) and (754B) respectively provide analog brake pressure information to the CECM-C at pins B25 and B26, see Schematic KG. The CECM-C converts this into digital data which is sent to the Bus Instrument Cluster to be shown on its brake pressure gauges (see also Schematic FC).

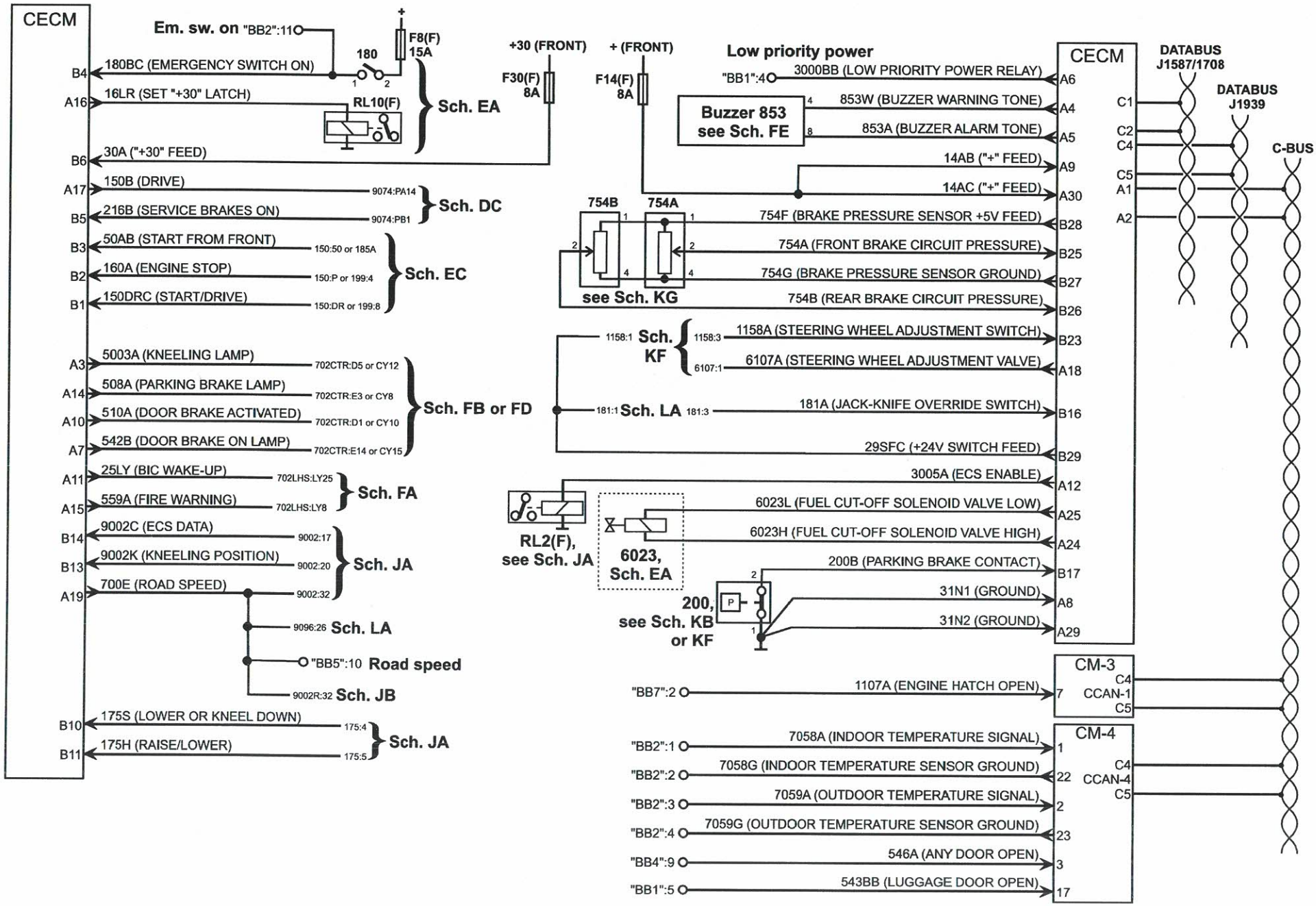
CECM
Em. sw. on "BB2":11
F8(F) 15A
180
B4 180BC (EMERGENCY SWITCH ON)
A16 16LR (SET "+30" LATCH)
RL10(F)
Sch. EA
B6 30A ("+30" FEED)
+30 (FRONT)
F30(F) 8A
+ (FRONT)
F14(F) 8A
A17 150B (DRIVE) 9074:PA14
B5 216B (SERVICE BRAKES ON) 9074:PB1
Sch. DC
B3 50AB (START FROM FRONT) 150:50 or 185A
B2 160A (ENGINE STOP) 150:P or 199:4
B1 150DRC (START/DRIVE) 150:DR or 199:8
Sch. EC
A3 5003A (KNEELING LAMP) 702CTR:D5 or CY12
A14 508A (PARKING BRAKE LAMP) 702CTR:E3 or CY8
A10 510A (DOOR BRAKE ACTIVATED) 702CTR:D1 or CY10
A7 542B (DOOR BRAKE ON LAMP) 702CTR:E14 or CY15
Sch. FB or FD
A11 25LY (BIC WAKE-UP) 702LHS:LY25
A15 559A (FIRE WARNING) 702LHS:LY8
Sch. FA
B14 9002C (ECS DATA) 9002:17
B13 9002K (KNEELING POSITION) 9002:20
A19 700E (ROAD SPEED) 9002:32
Sch. JA
9096:26 Sch. LA
"BB5":10 Road speed
9002R:32 Sch. JB
B10 175S (LOWER OR KNEEL DOWN) 175:4
B11 175H (RAISE/LOWER) 175:5
Sch. JA
Low priority power
"BB1":4 3000BB (LOW PRIORITY POWER RELAY) A6
Buzzer 853 see Sch. FE
853W (BUZZER WARNING TONE) A4
853A (BUZZER ALARM TONE) A5
14AB ("+" FEED) A9
14AC ("+" FEED) A30
754B 754A
see Sch. KG
754F (BRAKE PRESSURE SENSOR +5V FEED) B28
754A (FRONT BRAKE CIRCUIT PRESSURE) B25
754G (BRAKE PRESSURE SENSOR GROUND) B27
754B (REAR BRAKE CIRCUIT PRESSURE) B26
1158:1 Sch. KF
1158:3 1158A (STEERING WHEEL ADJUSTMENT SWITCH) B23
6107:1 6107A (STEERING WHEEL ADJUSTMENT VALVE) A18
181:1 Sch. LA 181:3 181A (JACK-KNIFE OVERRIDE SWITCH) B16
29SFC (+24V SWITCH FEED) B29
3005A (ECS ENABLE) A12
RL2(F), see Sch. JA
6023, Sch. EA
6023L (FUEL CUT-OFF SOLENOID VALVE LOW) A25
6023H (FUEL CUT-OFF SOLENOID VALVE HIGH) A24
200B (PARKING BRAKE CONTACT) B17
200, see Sch. KB or KF
31N1 (GROUND) A8
31N2 (GROUND) A29
CECM
DATABUS J1587/1708
DATABUS J1939
C-BUS
C1 C2 C4 C5 A1 A2
CM-3
"BB7":2 1107A (ENGINE HATCH OPEN) 7
C4 CCAN-1 C5
CM-4
"BB2":1 7058A (INDOOR TEMPERATURE SIGNAL) 1
"BB2":2 7058G (INDOOR TEMPERATURE SENSOR GROUND) 22
"BB2":3 7059A (OUTDOOR TEMPERATURE SIGNAL) 2
"BB2":4 7059G (OUTDOOR TEMPERATURE SENSOR GROUND) 23
"BB4":9 546A (ANY DOOR OPEN) 3
"BB1":5 543BB (LUGGAGE DOOR OPEN) 17
C4 CCAN-4 C5

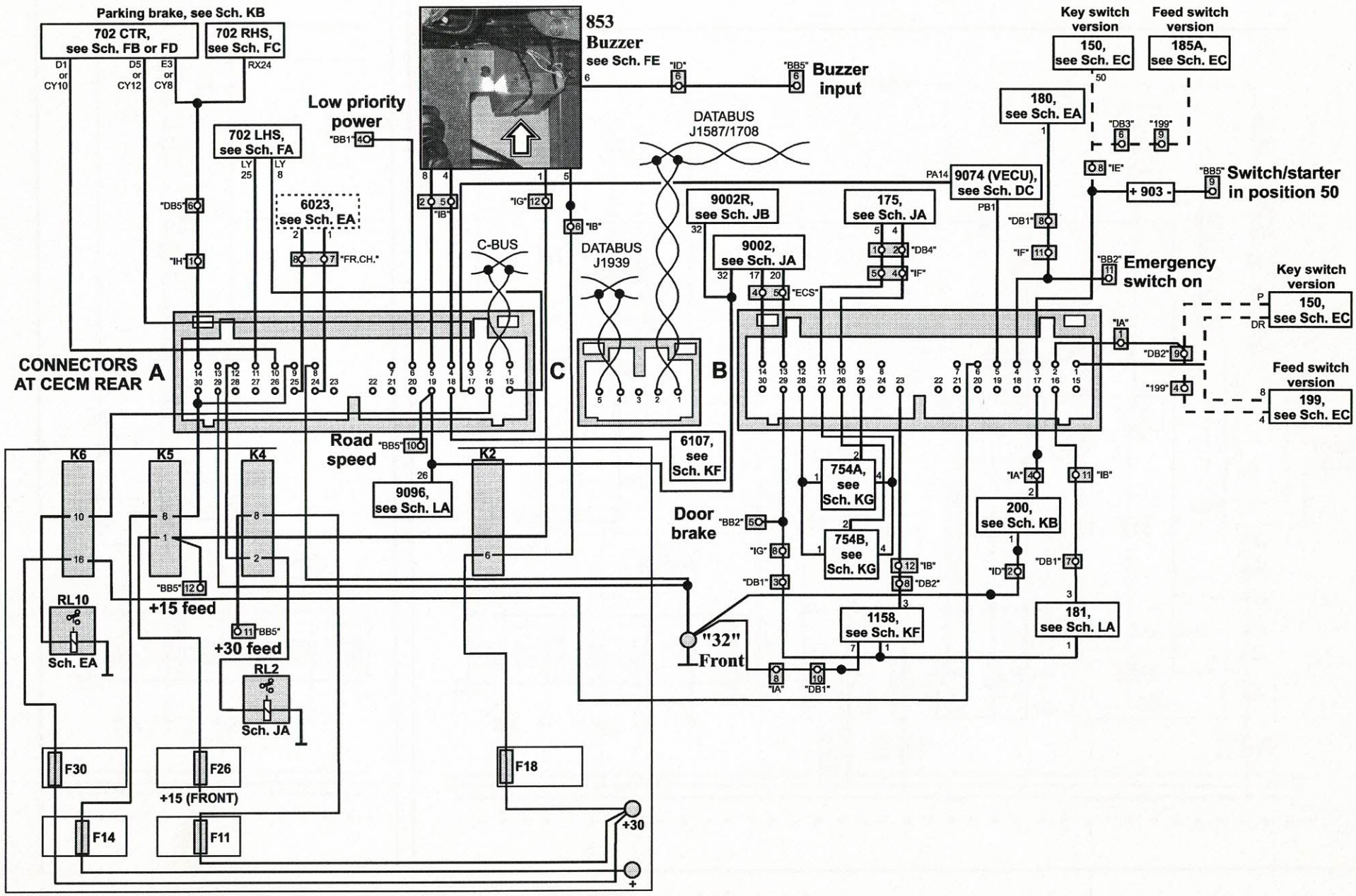

Fuse and relay locations on front electrical centre printed circuit card

EA Main relay, emergency cut-out switch (option)

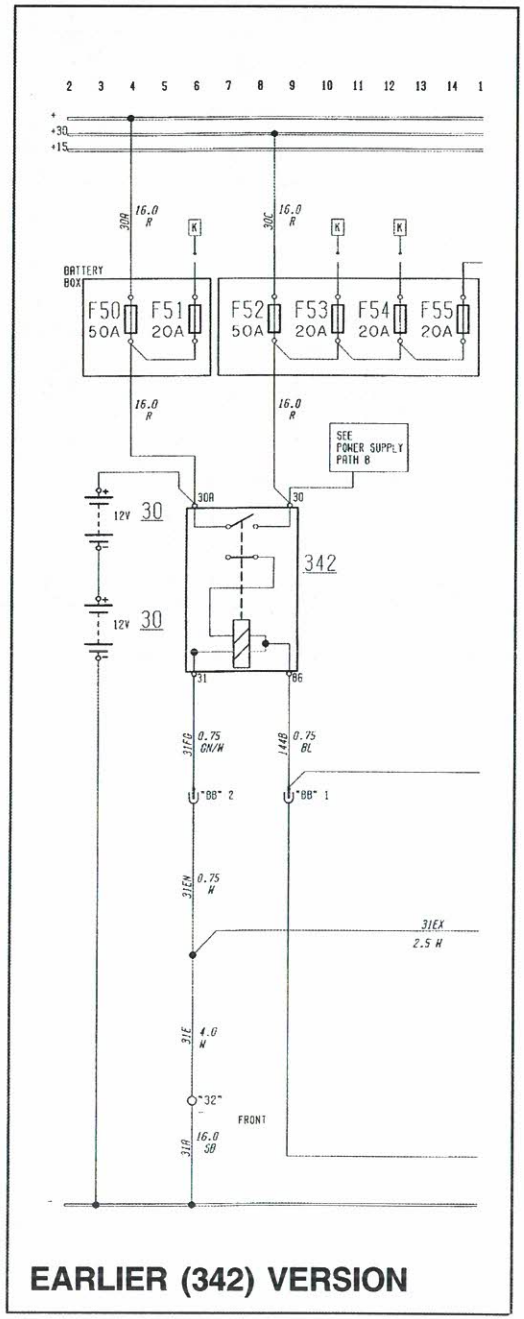

EARLIER (342) VERSION

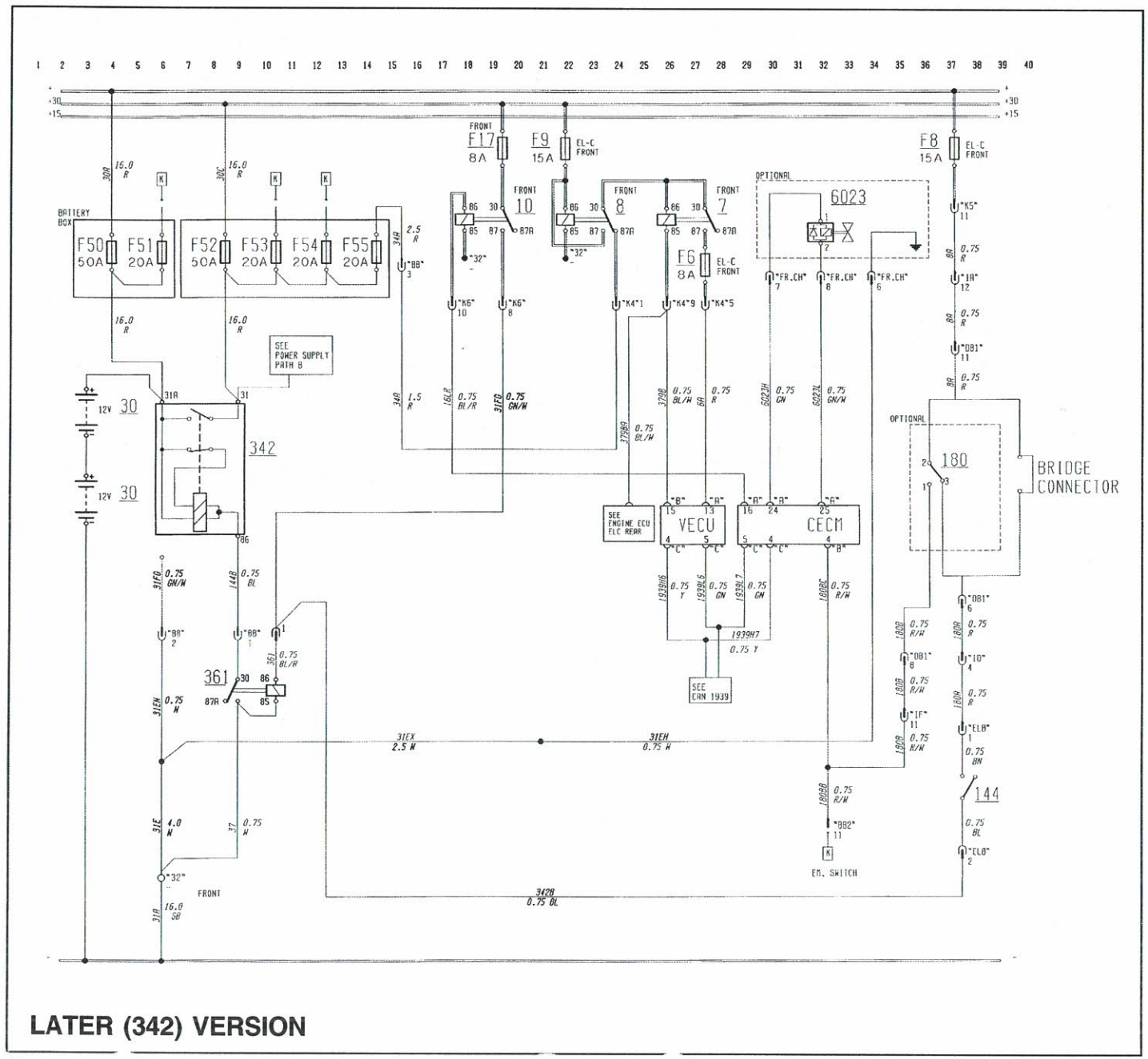

LATER (342) VERSION

Fuses in battery box

Fuse	Rating	Circuit protected by fuse
F50	50A	"+" feed to chassis
F51	20A	"+" feed to body circuits
F52	50A	"+30" feed to chassis
F53	20A	"+30" feed to body circuits
F54	20A	"+30" feed to body circuits
F55	20A	VECU (9074) back-up "+" feed

Fuses and relays in front electrical centre

Fuse	Rating	Circuit protected by fuse
F8	15A	Battery master switch (144)
F9	15A	"+30" feed to VECU (9074)
F17	8A	Latching feed to (361)

Relay	Circuit
RL7	Switched "+30" feed to VECU (9074)
RL8	"+30" feed to VECU (9074)
RL10	Latching feed to (361)

No.	Component
30	Batteries
144	Main switch
180	Emergency cut-out switch (option)
342	Main relay
361	Signal inverting relay
6023	Fuel shut-off solenoid valve (option)
9074	Vehicle Electronic Control Unit
CECM	Central Electronic Control Module

EA Circuit descriptions

Before the main switch (144) is closed, +24V from the batteries is available to any body components connected via fuse F51, and any other components that may be connected to the "+" line, via fuse F50.

"Earlier" and "later" versions of main relay (342)

The earlier version of main relay (342) was energised by receiving a 24V input signal from the main switch (144) at pin 86. The later version requires a ground signal at pin 86. This is provided by signal inverting relay (361), which iteself is energised from main switch (144). In both cases, when the main switch (144) is closed, (342) energises to close its upper contact. This permits battery "+" to energise the "+30" line and the distribution rail, with fuses F52, F53, F54 and F55.

(Cross-references to Schematics DB1 or DB2 and EB)

The "+" supply via (342) closed contact is also applied to the starter motor pin 30 and the pole (pin 30), of the starting heater relay (312).

When the ignition has been switched on, signalled by 50AA from the key (150) or feed switch (199) via the VECU (9074) pin PA6, pin PB15 goes low to energise RL7(F) which feeds (9074) with "+30" at pin PA13 via F6. This supply is normally obtained via fuse F9 and the self-latching relay RL8(F). If, however, F9 blows or the "+30" supply fails, RL8(F) de-energises but the supply to (9074) is maintained from the direct battery "+" line, via fuse F55, fed directly from the main relay (342 pin 30).

(Cross-reference to Schematic DB1 or DB2)

The (9074) pin PB:15 low signal also energises RL7(R) to supply "+30" via F9(R), RL8(R), RL7(R) and F22(R) to the engine control unit (9070) pins EB11 and EB12.

Closing the manual battery master switch (144) also causes CECM pin A:16 to go high and energise RL10(F), supplying "+30" from fuse F17 to latch (342) closed, preventing engine stop if the master switch (144) (inside the bus) is accidentally knocked off.

Emergency stop

In buses equipped with the optional emergency cut-out switch (180), the bridge connector is removed. (6023) is pulsed on for 350 milliseconds by CECM signals at pins A24 and A25 during engine start, and normally remains on to permit fuel flow to the engine. When the emergency cut-out switch (180) is operated it removes the supply to (342) coil and sends CECM pin B4 high. This causes CECM pin A16 to go low, de-energising RL10(F) and thus removing the (342) latch at pin 86 to remove the "+30" supply, switching off all the control circuits in the bus and immobilising it. At the same time, the fuel supply solenoid valve (6023) is toggled off by pulsing CECM pins A24 and A25 for 350 milliseconds. This shuts off the fuel supply and stops the engine. At the same time, the main relay (342) is de-energised to cut off most of the electrical power, and the hazard warning lights are switched on, as stipulated by the ECE R36 legal requirements.

The fact that the emergency cut-out switch (180) has been closed is also transmitted as a high digital output signal to body connector "BB2" pin 11 for use by any appropriate circuits that may have been installed by the coachbuilder.

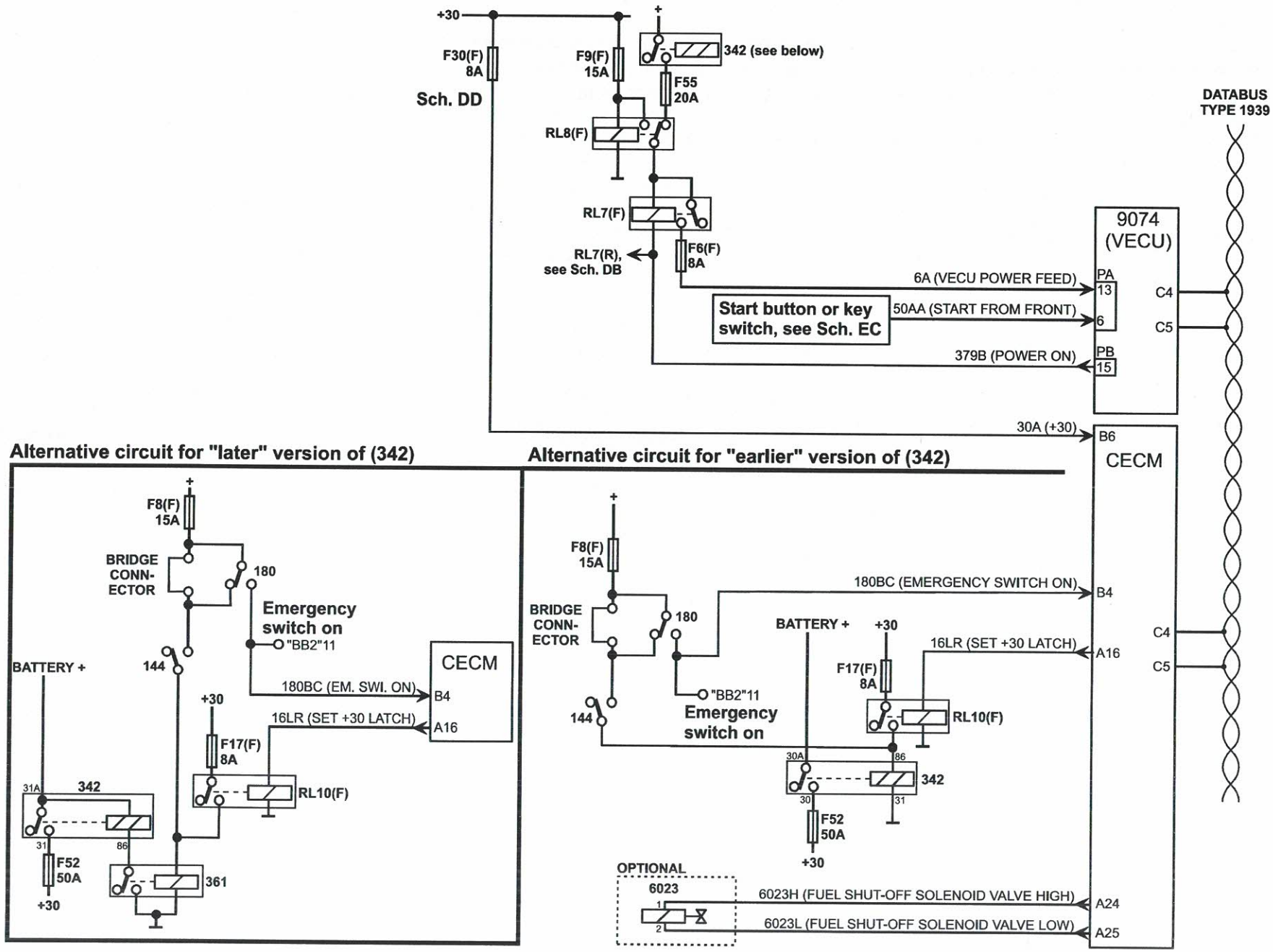
+30
F30(F)
8A
Sch. DD
F9(F)
15A
342 (see below)
F55
20A
RL8(F)
RL7(F)
RL7(R),
see Sch. DB
F6(F)
8A
6A (VECU POWER FEED)
Start button or key
switch, see Sch. EC
50AA (START FROM FRONT)
379B (POWER ON)
9074
(VECU)
PA
13
6
PB
15
C4
C5
DATABUS
TYPE 1939
30A (+30)
B6
CECM
Alternative circuit for "later" version of (342)
F8(F)
15A
BRIDGE
CONN-
ECTOR
180
Emergency
switch on
"BB2"11
BATTERY +
144
180BC (EM. SWI. ON)
B4
16LR (SET +30 LATCH)
A16
CECM
+30
F17(F)
8A
RL10(F)
31A
342
31
86
F52
50A
+30
361
Alternative circuit for "earlier" version of (342)
F8(F)
15A
BRIDGE
CONN-
ECTOR
180
180BC (EMERGENCY SWITCH ON)
B4
BATTERY +
+30
16LR (SET +30 LATCH)
A16
F17(F)
8A
"BB2"11
Emergency
switch on
144
RL10(F)
30A
86
342
30
31
F52
50A
+30
OPTIONAL
6023
1
2
6023H (FUEL SHUT-OFF SOLENOID VALVE HIGH)
6023L (FUEL SHUT-OFF SOLENOID VALVE LOW)
A24
A25

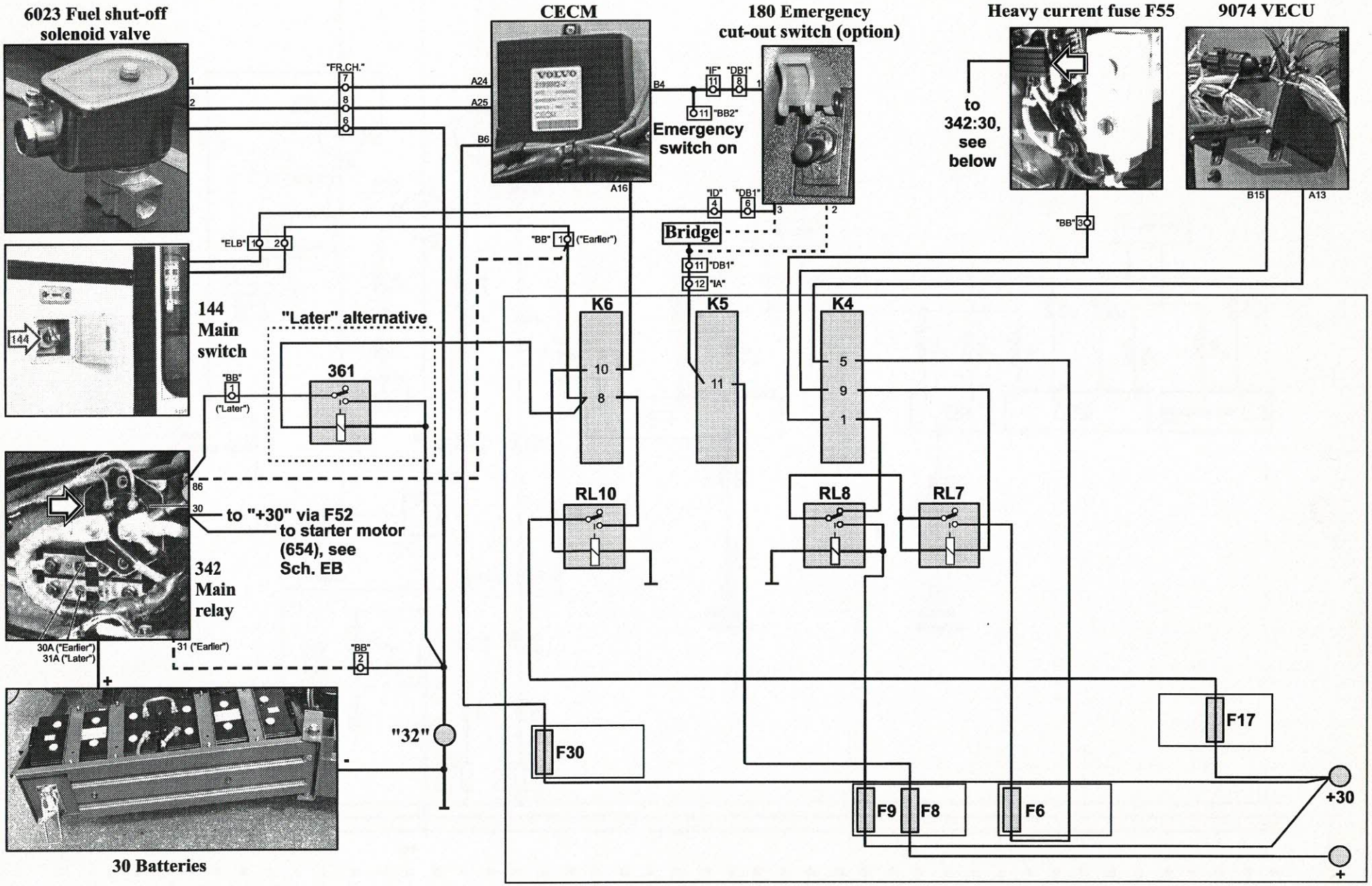

Fuse and relay locations on front electrical centre printed circuit card

EB Alternators

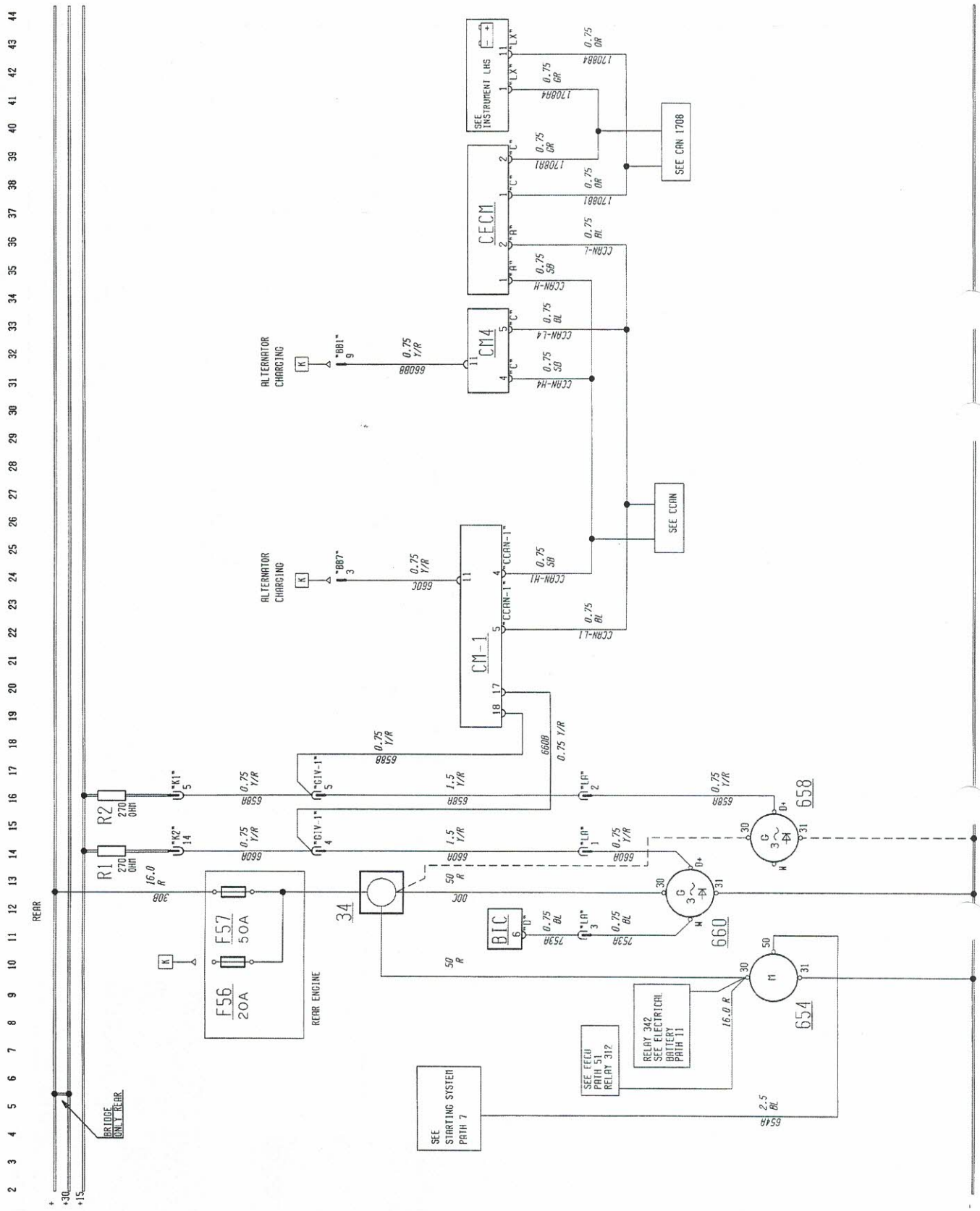

Heavy current fuses

Fuse	Rating	Circuit protected by fuse
F56	20A	"+" to body circuits
F57	50A	"+" feed to/from alternators

No.	Component
34	Connector
186	Engine start enable switch
654	Starter motor
658	Alternator 2
660	Alternator 1
702CTR	Bus Instrument Cluster, centre
702LHS	Bus Instrument Cluster, left hand side
CECM	Central Electronic Control Module
CM-1	Control Module 1
CM-4	Control Module 4
R1	Alternator 1 field resistance
R2	Alternator 2 field resistance

EB Circuit descriptions

Alternator field supply

Before the engine is started, the alternators (658) and (660) receive field current from the "+15" line via 270 ohm resistors R1 and R2 on the rear electrical centre printed circuit card.

Starter motor

If the starting conditions are correct (see Schematic EC), RL5 (rear) is energised to connect the "+15" rear supply to the starter motor solenoid (654) via pin 50. The internal starter solenoid energises to connect (654) pin 30 to the battery positive terminal via the closed contact of the battery master switch relay (342), see Schematic EA, and the starter motor (654) cranks the engine.

Immediately after starting

Alternator charging and engine running are reported to CM-1 pin 17 (and pin 18, if a second alternator is present), and externally via "BB7" pin 3 and "BB1" pin 9, to ensure high power consumers in the body are switched off when the engine is not running, conserving battery power. Failure to charge is indicated by a warning lamp on the left side of the Bus Instrument Cluster (702LHS) via signal 753A to (702CTR) pin D:6, which in the case of a charging failure will light the lamp 3 seconds after the engine has started.

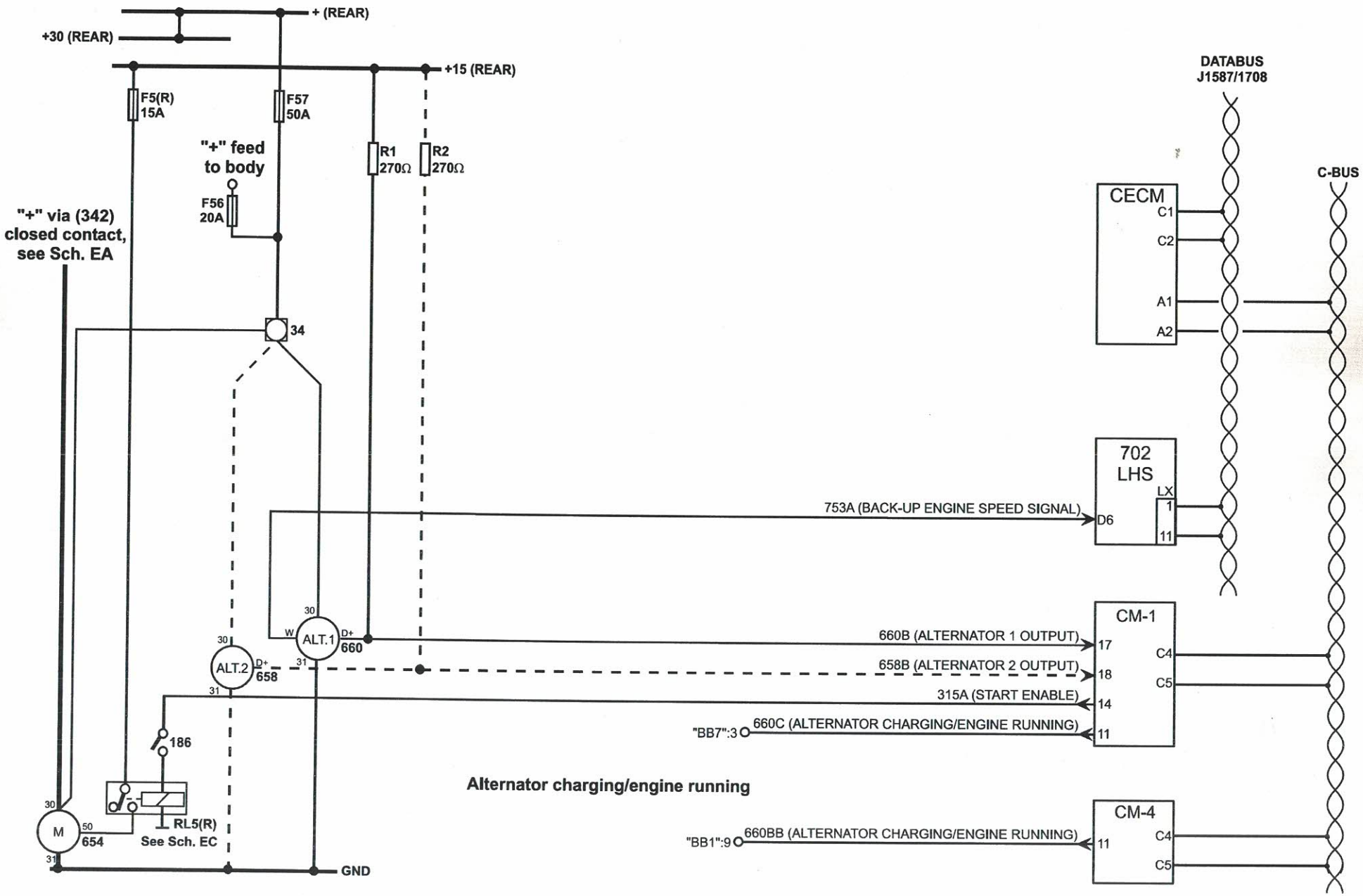
+ (REAR)
+30 (REAR)
+15 (REAR)
F5(R)
15A
F57
50A
"+" feed
to body
F56
20A
R1
270Ω
R2
270Ω
"+" via (342)
closed contact,
see Sch. EA
34
ALT.1
ALT.2
D+
660
658
186
RL5(R)
See Sch. EC
M
654
GND
DATABUS
J1587/1708
C-BUS
CECM
C1
C2
A1
A2
702
LHS
LX
D6
753A (BACK-UP ENGINE SPEED SIGNAL)
CM-1
660B (ALTERNATOR 1 OUTPUT)
658B (ALTERNATOR 2 OUTPUT)
315A (START ENABLE)
"BB7":3
660C (ALTERNATOR CHARGING/ENGINE RUNNING)
Alternator charging/engine running
CM-4
"BB1":9
660BB (ALTERNATOR CHARGING/ENGINE RUNNING)

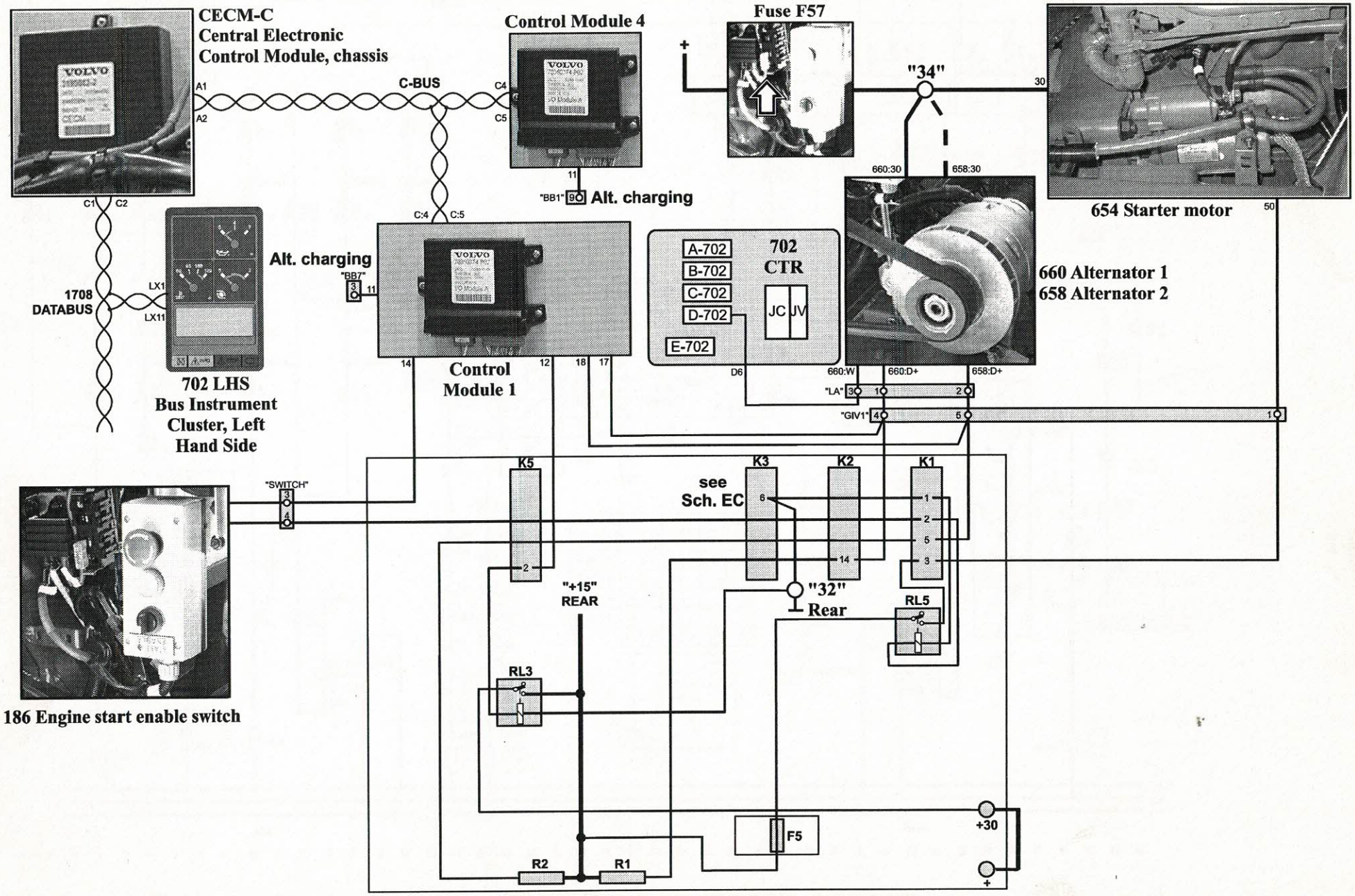

Fuse and relay locations on rear electrical centre printed circuit card

EC Key switch, feed switch and engine start/stop circuits

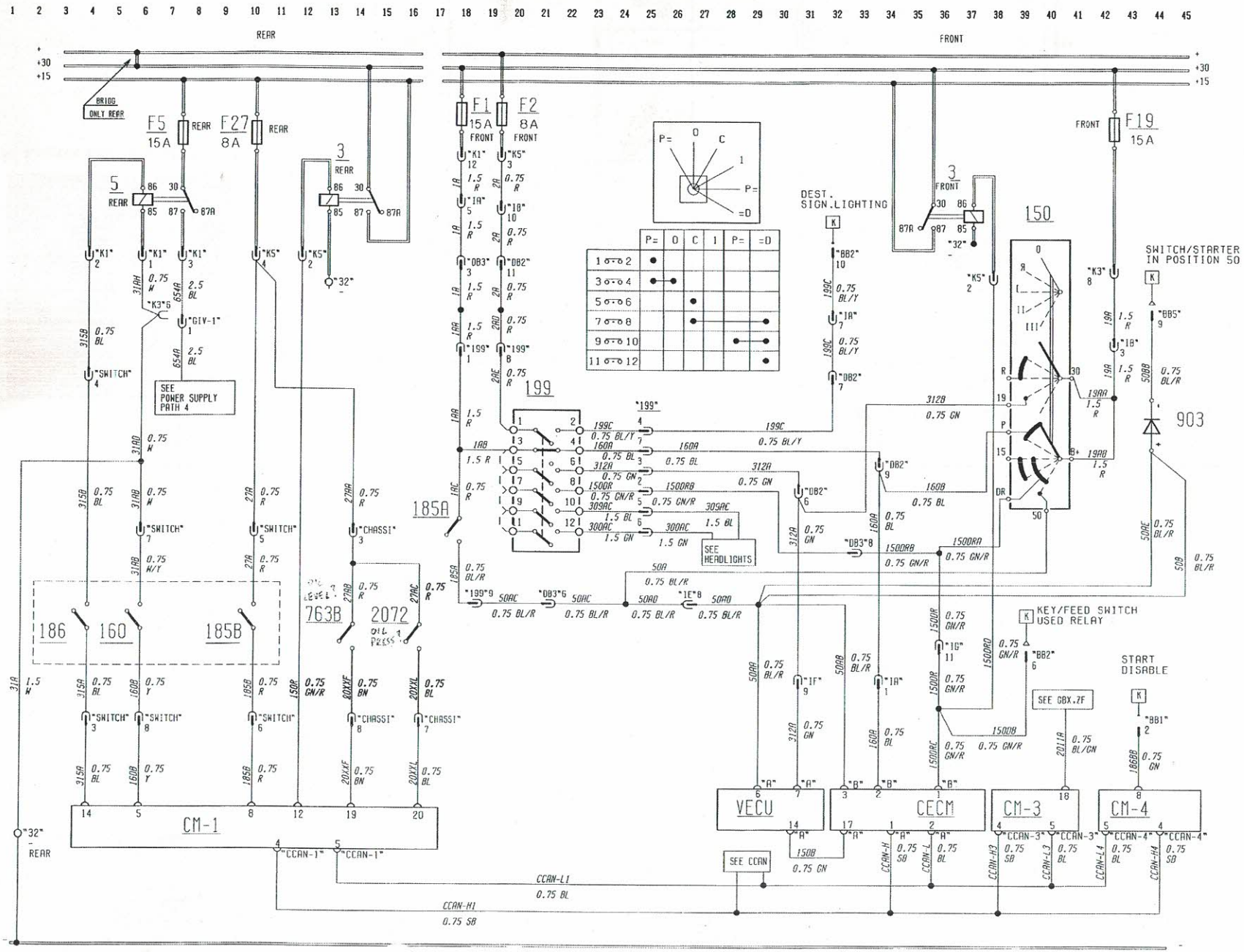

Fuses and relay on front electrical centre card

Fuse	Rating	Circuit protected by fuse
F1	15A	Feed switch (199) and front start button (185A)
F2	8A	Destination sign lighting
F19	15A	Key switch feed
Relay	**Circuit**	
RL3	"+15" feed to front circuits	

Fuses and relays on rear electrical centre card

Fuse	Rating	Circuit protected by fuse
F5	15A	Starter motor solenoid
F27	8A	Engine start button at rear, hydr. oil switches
Relay	**Circuit**	
RL3	"+15" feed to rear circuits	
RL5	Starter motor solenoid	

No.	Component
150	Key switch
160	Engine stop button at rear
185A	Engine start button at front
185B	Engine start button at rear
186	Engine start enable switch
199	Feed switch
763B	Hydraulic oil level low switch
903	Diode
2072	Hydraulic oil filter pressure high switch
9074	Vehicle Electronic Control Unit
CECM	Central Electronic Control Module
CM-1	Control Module 1
CM-3	Control Module 3
CM-4	Control Module 4

EC Circuit descriptions

Engine start conditions, applying to either front or rear starting:
– the engine start inhibit switch (186) must be closed; if it is open, the engine cannot be started from the front or rear
– the engine must not be running already, confirmed by zero engine speed signals from (753A) and (753B), see Schematic DB1 or DB2
– the transmission must be in neutral, confirmed either from (196) via CM-3 pin 18 input for ZF transmissions, see Schematic HA, or from (196) via (909) for Voith transmissions, see Schematic HB. The End Of Line (EOL) parameters specify the type of transmission installed in the bus, which determines the appropriate software configuration
– if an external start disable switch is connected to "BB1" pin 2, it is not grounding the input to CM-4 pin 8
External lighting that must be permanently on, such as for destination signs, may be fed from "BB2" pin 10 (only on buses equipped with a feed switch (199)).

Starting the engine from the driver's seat (front starting)
The feed switch (199) or key switch (150) supplies a high 150DRC signal to CECM-C pin B1 and energises RL3 (front), which provides the front "+15" supply. With the feed switch option, the front engine start button (185A) is then pressed, high start signals 50AA and 50AB are applied to (9074) pin PA6 and CECM-C pin B3 respectively and "BB5" pin 9, the latter to switch off high power consumers and relieve the battery load while starting. Similarly, with the key switch (150) option, high start signals 50AA and 50AB are also transmitted. If the other conditions are correct, a high output from CM-1 pin 14 via closed switch (186) energises RL5 (rear) to connect the "+15" rear supply to the starter motor solenoid (654) via its pin 50. The internal starter solenoid energises to connect (654) pin 30 to the battery positive terminal via (342) closed contact and the engine cranks, see Schematics EA and EB.

Starting the engine from the rear of the bus (rear starting)
When the rear start button (185B) is pressed to send signal 185B to CM-1 pin 8 high, CM-1 pin 14 goes high and energises RL5 (rear) via the closed contact of (186). This energises the starter motor solenoid via pin 50 of (654) and cranks the engine. Note that the engine access hatch is permitted to be open in this case.

Cold starting
Refer to the Schematic DB1 or DB2 circuit description for the engine cold start sequence.

Immediately after starting
Once the engine has started, releasing the engine start button or sprung key switch removes the high 50AA and 50AB signals, but the "drive" signal 150B is maintained by the CECM-C to (9074) pin PA14. (150) pin DR or (199) pin 8 remains energised to keep the front "+15" supply alive. Alternator charging and engine running are reported to CM-1 pin 17 (and pin 18, if a second alternator is present), and externally via "BB7" pin 3 via CM-1 pin 11, and "BB1" pin 9, see Sch. EB, to ensure that high power consumers in the body are switched off when the engine is not running, conserving battery power. Failure to charge is indicated by a warning lamp on the left side of the Bus Instrument Cluster (702LHS) via signal 753A to (702CTR) pin D6, which in the case of a charging failure will light the lamp 3 seconds after the engine has started.

Engine stop
The engine is normally stopped by setting the parking brake and then either turning the feed switch (199) or the key switch (150) to its "0" position, removing all signal inputs from the VECU (9074) and the CECM-C . In buses with the fuel shut-off option, the fuel flow shut-off solenoid (6023) is de-energised via signals 6023H and 6023L from the CECM-C (see Schematic EA) thus cutting off the flow of fuel. Alternatively the engine can be stopped from the rear by means of the stop button (160), which is normally used when servicing the engine, or can be used in an emergency. Refer to the Schematic EA circuit description for the driver's emergency stop sequence.

Cooling fan hydraulic system (B7TL double-deck buses only)
The hydraulically-driven cooling fan has sensors to detect low oil level (763B) and excessive filter pressure drop (2072), in case the filter becomes blocked. The driver is warned by icons on the instrument panel display if either of these conditions occur, by signals received via Control Module 1 pins 19 and 20 repectively and the C-bus to the BIC. Note that the hydraulic oil filter serves both the cooling fan and the power steering systems. The hydraulic pump delivery pressure and thereby the fan speed are controlled by a PWM signal from (9070) pin EB21 acting on the hydraulic oil restrictor solenoid valve, see Schematic DB2 for details.

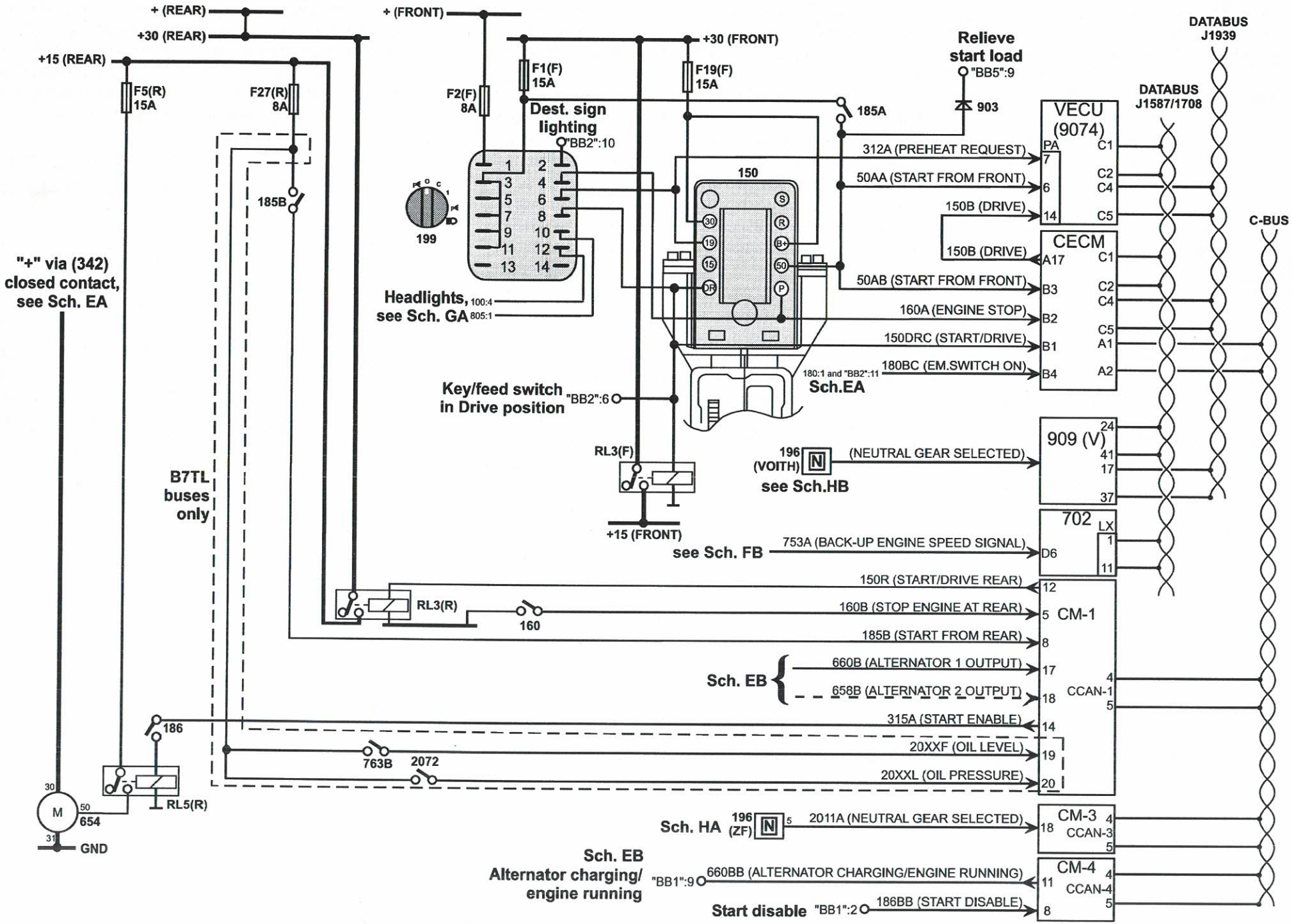
+ (REAR)
+30 (REAR)
+15 (REAR)
F5(R) 15A
F27(R) 8A
185B
"+" via (342) closed contact, see Sch. EA
B7TL buses only
+ (FRONT)
F2(F) 8A
F1(F) 15A
Dest. sign lighting
"BB2":10
199
Headlights, see Sch. GA
100:4
805:1
+30 (FRONT)
F19(F) 15A
185A
150
Key/feed switch in Drive position
"BB2":6
RL3(F)
+15 (FRONT)
RL3(R)
160
186
763B
2072
RL5(R)
M
30
50
654
31
GND
Relieve start load
"BB5":9
903
312A (PREHEAT REQUEST)
50AA (START FROM FRONT)
150B (DRIVE)
150B (DRIVE)
50AB (START FROM FRONT)
160A (ENGINE STOP)
150DRC (START/DRIVE)
180BC (EM.SWITCH ON)
180:1 and "BB2":11
Sch.EA
196 (VOITH)
see Sch.HB
(NEUTRAL GEAR SELECTED)
see Sch. FB
753A (BACK-UP ENGINE SPEED SIGNAL)
150R (START/DRIVE REAR)
160B (STOP ENGINE AT REAR)
185B (START FROM REAR)
Sch. EB
660B (ALTERNATOR 1 OUTPUT)
658B (ALTERNATOR 2 OUTPUT)
315A (START ENABLE)
20XXF (OIL LEVEL)
20XXL (OIL PRESSURE)
Sch. HA
196 (ZF)
2011A (NEUTRAL GEAR SELECTED)
Sch. EB Alternator charging/ engine running
"BB1":9
660BB (ALTERNATOR CHARGING/ENGINE RUNNING)
Start disable
"BB1":2
186BB (START DISABLE)
VECU (9074)
PA
C1
C2
C4
C5
CECM
A17
B3
B2
B1
B4
A1
A2
909 (V)
24
41
17
37
702
LX
D6
CM-1
CCAN-1
CM-3
CCAN-3
CM-4
CCAN-4
DATABUS J1939
DATABUS J1587/1708
C-BUS

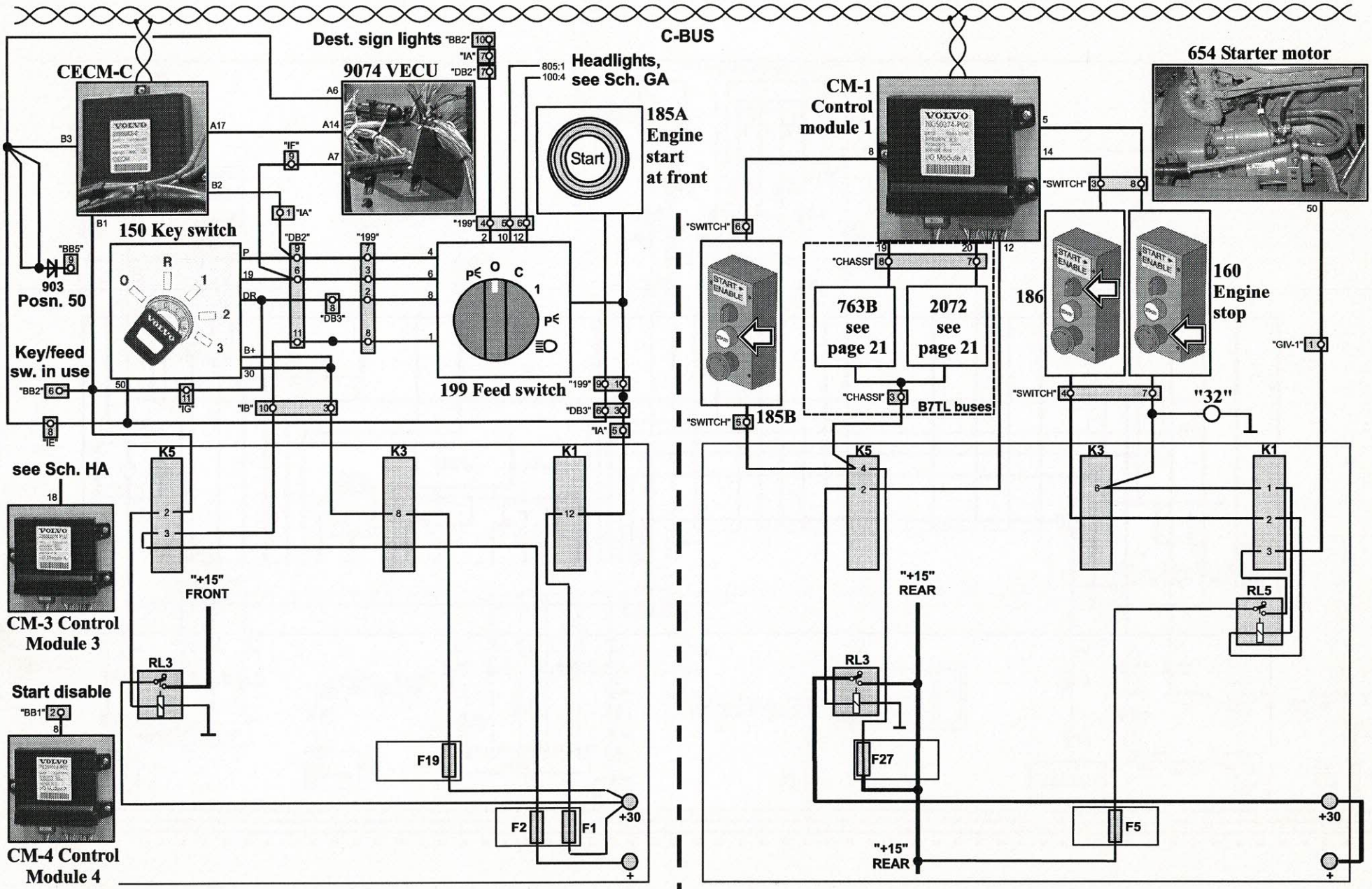

Fuse and relay locations on front electrical centre printed circuit card

Fuse and relay locations on rear electrical centre printed circuit card

FA Bus Instrument Cluster, left side (702LHS)

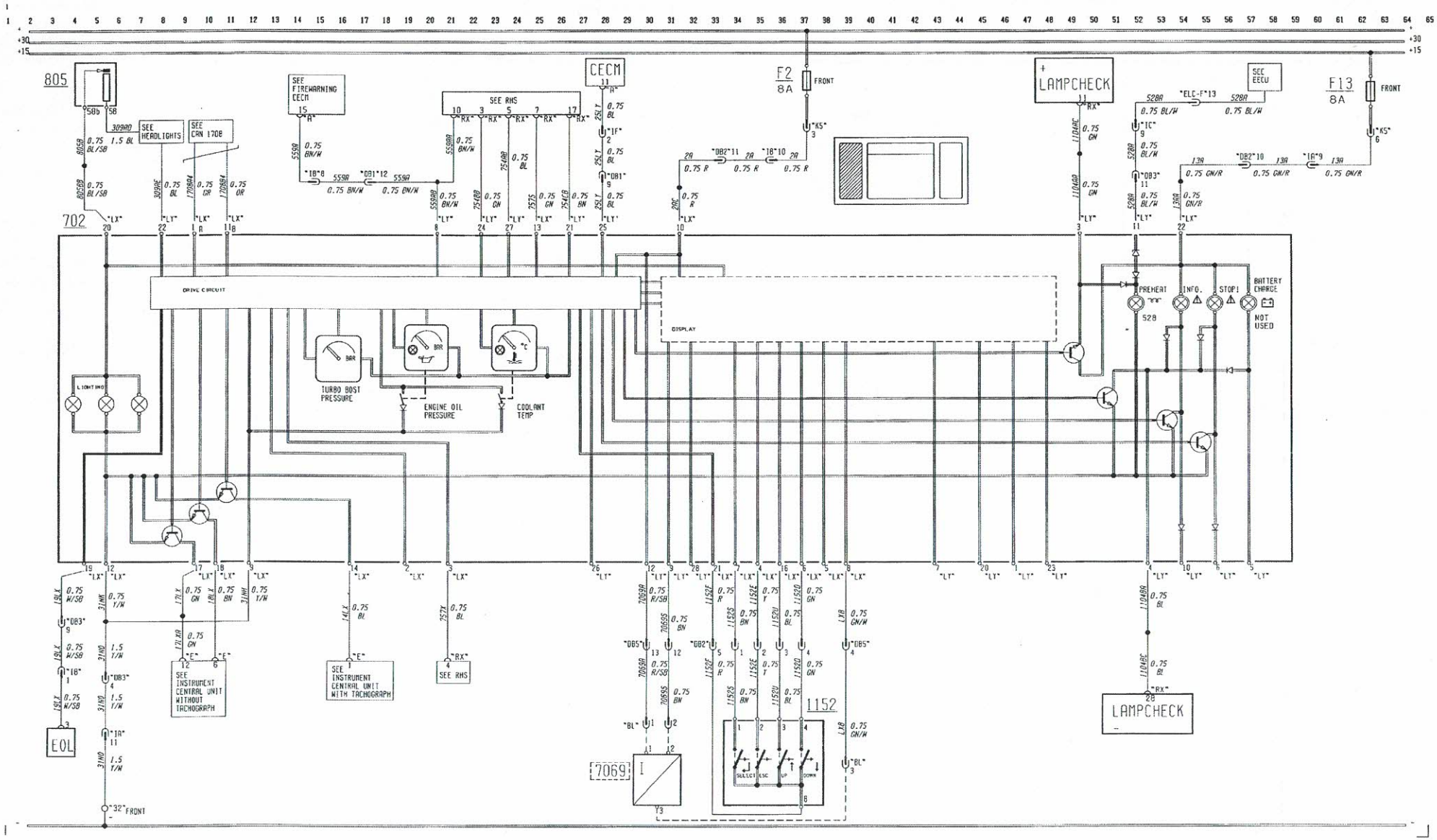

Fuses on front electrical centre card

Fuse	Rating	Circuit protected by fuse
F2	8A	"+" feed to display, gauges and lamp drive
F13	8A	INFO lamp

No.	Component
528	PREHEAT indicator lamp
702LHS	Bus Instrument Cluster, Left Hand Side
	INFO caution lamp
	STOP immediately warning lamp
	Oil pressure gauge
	Coolant temperature gauge
	Turbocharger boost pressure gauge
805	Panel lamps dimmer rheostat
1152	Multi-function display control
7069	Ammeter sensor
CECM-C	Central Electronic Control Module, chassis
EOL	End Of Line connector

FA Circuit descriptions

This part of the Bus Instrument Cluster contains the display and its control circuits. It receives some signals from external sources via the J1587/1708 databus and transfers them to the centre and right hand side units as required. Note that databus communication is only normally possible when the feed or key switch is set to "Drive", since the BIC is fed from the "+15" line. However, major alarms cause a signal from CECM-C pin A11 to "wake up" the BIC and activate its audible alarm annunciator, even with the ignition switched off (refer to Schematic DD).

Lamp test

The warning and indicator lamp bulbs in all three parts of the BIC are tested by applying "+" and "–" inputs as appropriate to them from drive transistors in this unit.

Display control

The multi-function display control (1152) consists of three switches built into the windscreen wiper stalk. From left to right, these are the Escape button, Select button and Up/Down switch, which are used as described in the Driver's Handbook to control menus and select information appearing on the display.

Gauges

The oil pressure, coolant temperature and turbocharger pressure values, which are received via the engine control unit (9070) from the appropriate sensors, are transmitted over the J1587/1708 databus to be shown on the instrument cluster left hand side gauges. If the optional ammeter is installed, it receives its signals from the ammeter sensor (7069). A separate document, "*Operating Instructions – Display – Volvo 5000/7000/B7L*" contains full details on the contents and operation of the display.

Warning lamps

(702LHS) carries four warning lamps at the bottom edge; PREHEAT, INFO, STOP and alternator not charging (not used). The INFO and STOP lamps are activated as required by the internal BIC logic, while the starting heater PREHEAT lamp is hard-wired.

Panel lamps and display

If the vehicle lighting is switched on, so that the panel lamps dimmer rheostat (805) is supplying a panel lamps voltage, the BIC internally reads the backlighting level being used by the display and transmits this as a "dimmer level" to the CECM, to provide lighting levels for additional panel lamps via Control Module 4, DIMMER 1 and DIMMER 2. These are two separate outputs both supplying the same panel lamp voltage (see also Schematic GA).

When the vehicle lighting is switched off, the incoming bus lighting off signal at 702LHS pin LY22 is used to switch off display reversal which is used when the lights are on to make the display easier for the driver to see.

Fuel and brake pressure information to (702RHS)

As described in Schematic KH, fuel level information is received by the CECM-C and transmitted via the J1587/1708 databus to (702LHS), converted and sent on via pins LX3 and LX13 to the gauge and LED on (702RHS), see Schematic FC. Similarly, the brake pressures are received from their sensors via the CECM-C , converted and sent on via pins LX21, LX24 and LX27 to the gauges on the BIC right hand side (702RHS).

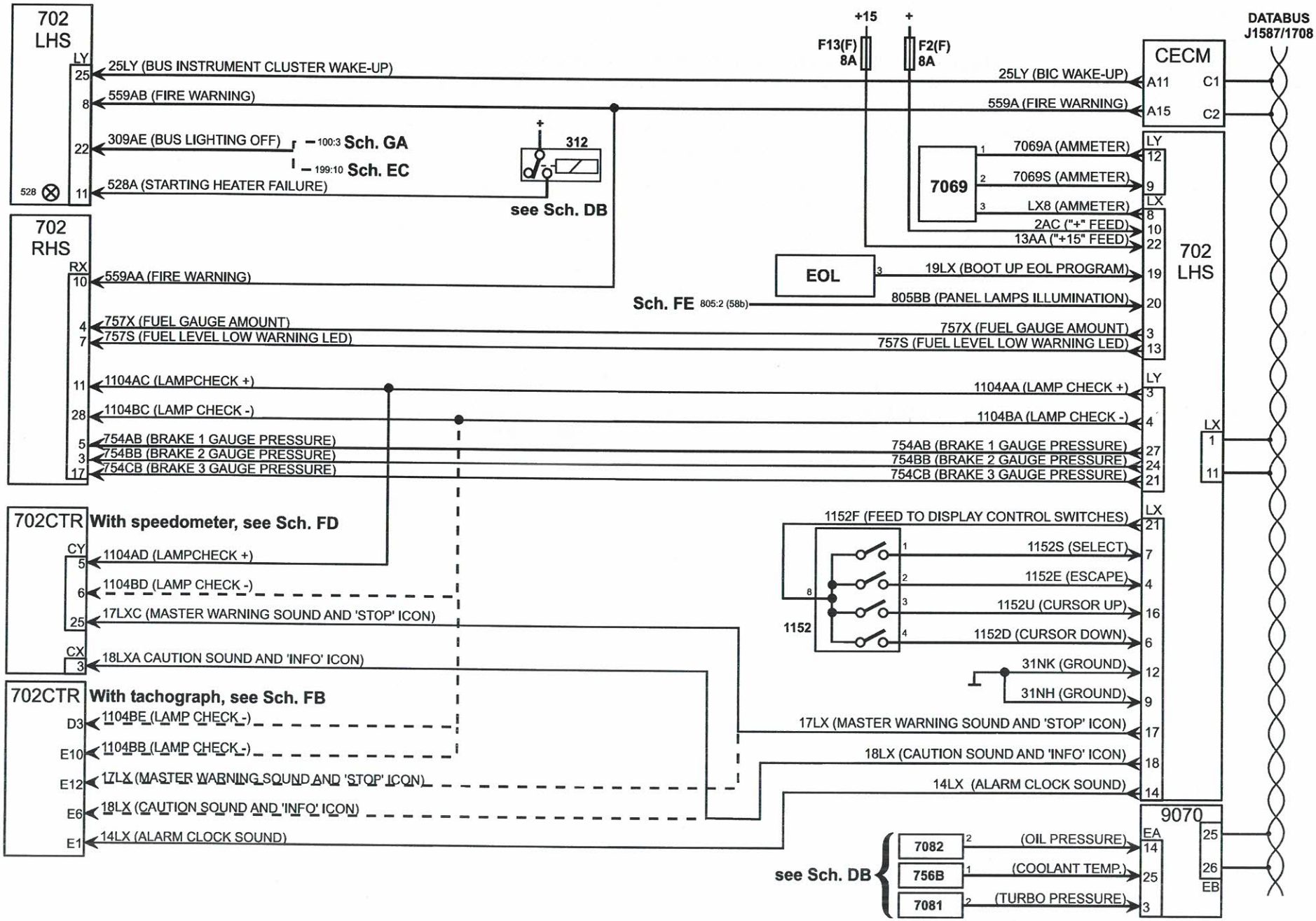
702 LHS
LY
25
8
22
11
528
25LY (BUS INSTRUMENT CLUSTER WAKE-UP)
559AB (FIRE WARNING)
309AE (BUS LIGHTING OFF)
100:3 Sch. GA
199:10 Sch. EC
528A (STARTING HEATER FAILURE)
312
see Sch. DB
702 RHS
RX
10
4
7
11
28
5
3
17
559AA (FIRE WARNING)
757X (FUEL GAUGE AMOUNT)
757S (FUEL LEVEL LOW WARNING LED)
1104AC (LAMPCHECK +)
1104BC (LAMP CHECK -)
754AB (BRAKE 1 GAUGE PRESSURE)
754BB (BRAKE 2 GAUGE PRESSURE)
754CB (BRAKE 3 GAUGE PRESSURE)
702CTR
With speedometer, see Sch. FD
CY
5
6
25
CX
3
1104AD (LAMPCHECK +)
1104BD (LAMP CHECK -)
17LXC (MASTER WARNING SOUND AND 'STOP' ICON)
18LXA CAUTION SOUND AND 'INFO' ICON)
702CTR
With tachograph, see Sch. FB
D3
E10
E12
E6
E1
1104BE (LAMP CHECK -)
1104BB (LAMP CHECK -)
17LX (MASTER WARNING SOUND AND 'STOP' ICON)
18LX (CAUTION SOUND AND 'INFO' ICON)
14LX (ALARM CLOCK SOUND)
+15
+
F13(F) 8A
F2(F) 8A
CECM
A11
A15
C1
C2
DATABUS J1587/1708
25LY (BIC WAKE-UP)
559A (FIRE WARNING)
7069
7069A (AMMETER)
7069S (AMMETER)
LX8 (AMMETER)
2AC ("+" FEED)
13AA ("+15" FEED)
EOL
19LX (BOOT UP EOL PROGRAM)
Sch. FE 805:2 (58b)
805BB (PANEL LAMPS ILLUMINATION)
757X (FUEL GAUGE AMOUNT)
757S (FUEL LEVEL LOW WARNING LED)
1104AA (LAMP CHECK +)
1104BA (LAMP CHECK -)
754AB (BRAKE 1 GAUGE PRESSURE)
754BB (BRAKE 2 GAUGE PRESSURE)
754CB (BRAKE 3 GAUGE PRESSURE)
1152F (FEED TO DISPLAY CONTROL SWITCHES)
1152
1152S (SELECT)
1152E (ESCAPE)
1152U (CURSOR UP)
1152D (CURSOR DOWN)
31NK (GROUND)
31NH (GROUND)
17LX (MASTER WARNING SOUND AND 'STOP' ICON)
18LX (CAUTION SOUND AND 'INFO' ICON)
14LX (ALARM CLOCK SOUND)
702 LHS
LY
LX
9070
EA
EB
see Sch. DB
7082
756B
7081
(OIL PRESSURE)
(COOLANT TEMP.)
(TURBO PRESSURE)

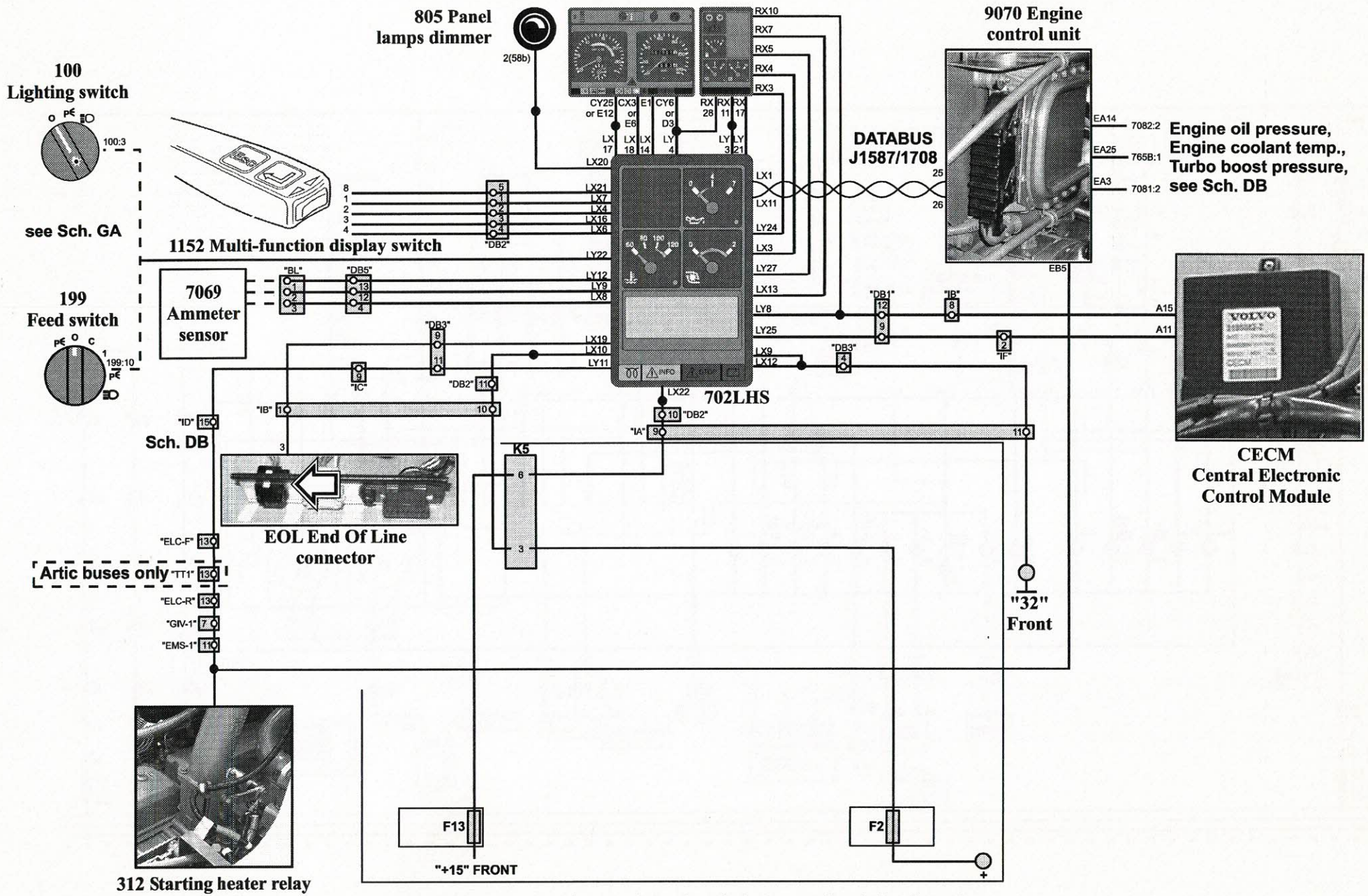

Fuse and relay locations on front electrical centre printed circuit card

FB Bus Instrument Cluster, centre, with tachograph (702CTR)

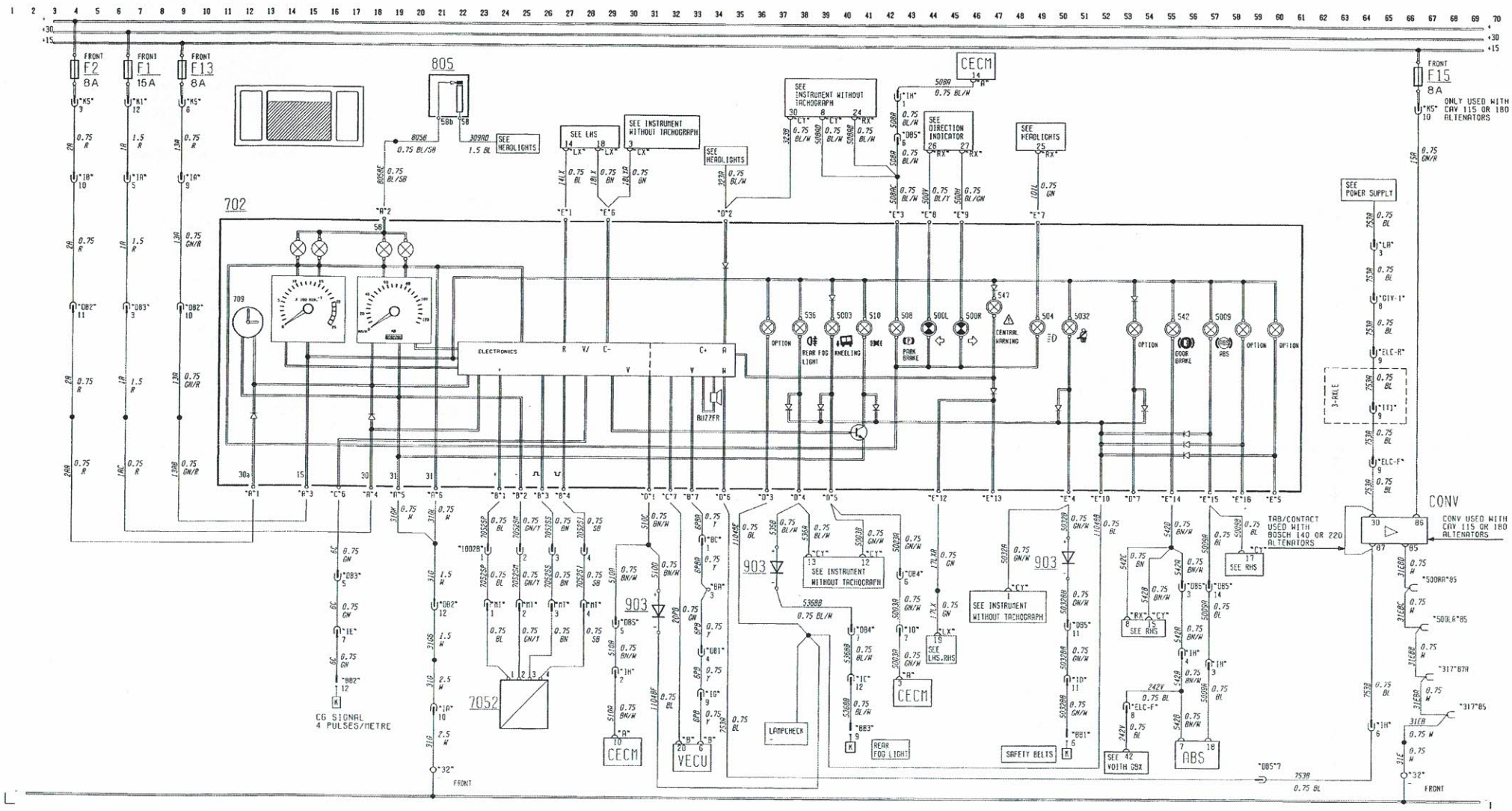

Fuses on front electrical centre card

Fuse	Rating	Circuit protected by fuse
F1	15A	"+30" feed to Tachograph
F2	8A	Tachograph, Clock
F13	8A	"+15" feed to Tachograph
F15	8A	Frequency converter (buses with CAV alternators)

No.	Component
500L	Direction indicators left turn indication lamp
500R	Direction indicators right turn indication lamp
504	High beam indicator lamp
508	Parking brake off warning lamp
536	Rear fog lights indicator lamp
542	Door brake warning lamp
547	Central warning lamp
702	Bus Instrument Cluster, Centre:
	Tachometer
	Tachograph
	Odometer
	Audible annunciator (labelled BUZZER)
709	Tachograph clock
805	Panel lamps dimmer rheostat
903	Diode
5003	ECS kneel indicator lamp
5009	ABS indicator lamp
5032	Driver's seat belt warning lamp
7052	Transmission speed sender
9008	ABS control unit
9074	Vehicle Electronic Control Unit (VECU)
CECM	Central Electronic Control Module
CONV	Frequency converter (buses with CAV alternators)

FB Circuit descriptions

With the tachometer and clock at the left and the tachograph at the right, this unit also has a row of warning and indication lamps along the bottom edge. It receives power from all three of the main power feed lines in the bus front electrical centre: "+" via fuse 2 for the tachograph feed 1, "+30" via fuse 1 for the tachograph feed 2 and "+15" via fuse 13 for the warning and indication lamps. The feed 1 input at (702CTR) pin A1, which also supplies the tachograph clock, is internally current-limited. The door brake warning lamp (542) is lit by a signal from the ABS circuit (see also Schematic IA).

Lamp test

The lamp test position of the key switch (150) or the feed switch (199), see Schematic EC, causes all the warning and indication lamps to be lit. This includes lamps that are not otherwise used to provide warnings or indications. The reason for this is to avoid "gaps" in the lit lamps that would otherwise make it look as if some bulbs had failed.

Road speed

The transmission speed sender (7052) at the transmission output provides both positive-going and negative-going speed pulses to (702CTR), at a pulse rate depending on the vehicle speed. After conversion into digitised pulse signals this information is transmitted from (702CTR) pins B7 and C7 to the VECU (9074).

Frequency converter

Buses equipped with a tachograph and a CAV 115A or 180A alternator include a frequency converter (CONV), inserted into a relay socket on the front electrical centre. This raises the frequency of the incoming signal from the alternator "W" (charging warning lamp) terminal by 50% to provide the correct engine speed back-up signal to pin D6 of the Bus Instrument Cluster centre unit (702CTR). Buses equipped with the Bosch 140A or 220A alternators do not use this converter, in which case the empty relay socket has a jumper link to connect its pins 30 and 87. The front electrical centre fuse F15 is also removed in this case, since it has no other purpose than to feed the converter.

Signals to and from body connectors

When grounded, "BB1" pin 6 lights the warning lamp (5032) for the driver's seat belt. Similarly, when "BB3" pin 9 is grounded the rear fog lamps warning lamp (536) is lit.

"BB2" pin 12 supplies pulses at the rate of 4 pulses per metre travelled. This output can be used by coachbuilders, typically to change the destination sign automatically. This signal is only available on buses that are equipped with a tachograph.

Derived from the tachograph or speedometer, the 5 km/h and 20 km/h speed switch signals are made available to the body connectors "BB4" pin 8 and "BB4" pin 10 respectively via the J1587/1708 databus, the CECM, the C-bus and finally Control Module CM-3 pins 11 and 12 respectively. The pin 8 signal may be used to operate door warning and interlock systems. The signal at pin 10 may be used to reactivate outside emergency door opening controls installed by the coachbuilder.

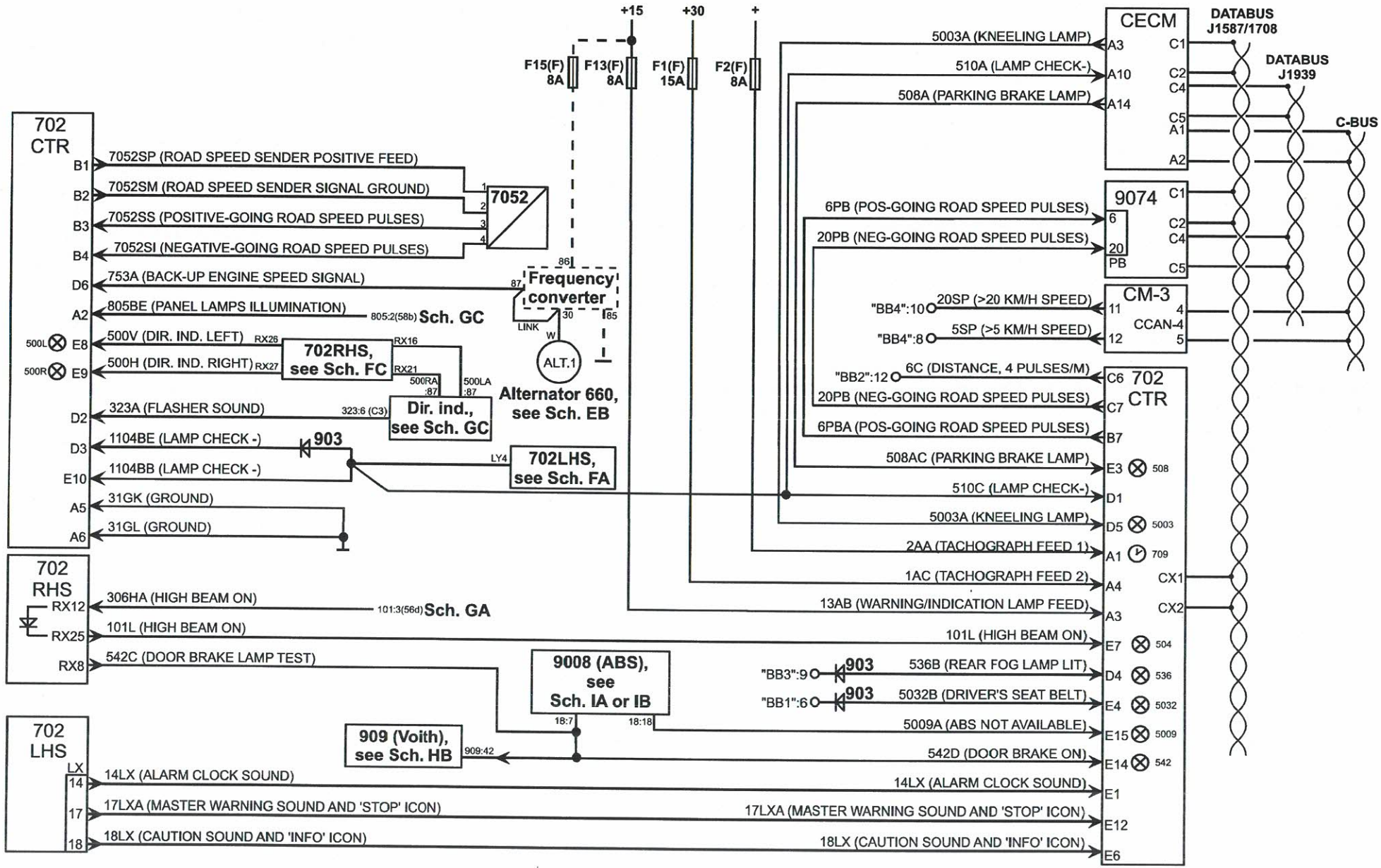
+15
+30
+
F15(F) 8A
F13(F) 8A
F1(F) 15A
F2(F) 8A
702 CTR
B1 7052SP (ROAD SPEED SENDER POSITIVE FEED)
B2 7052SM (ROAD SPEED SENDER SIGNAL GROUND)
B3 7052SS (POSITIVE-GOING ROAD SPEED PULSES)
B4 7052SI (NEGATIVE-GOING ROAD SPEED PULSES)
D6 753A (BACK-UP ENGINE SPEED SIGNAL)
A2 805BE (PANEL LAMPS ILLUMINATION)
805:2(58b) Sch. GC
500L E8 500V (DIR. IND. LEFT) RX26
500R E9 500H (DIR. IND. RIGHT) RX27
D2 323A (FLASHER SOUND) 323:6 (C3)
D3 1104BE (LAMP CHECK -)
E10 1104BB (LAMP CHECK -)
A5 31GK (GROUND)
A6 31GL (GROUND)
7052
702RHS, see Sch. FC
RX16
RX21
500RA :87
500LA :87
Dir. ind., see Sch. GC
903
LY4
702LHS, see Sch. FA
Frequency converter
86
87
30
85
LINK
W
ALT.1
Alternator 660, see Sch. EB
702 RHS
RX12 306HA (HIGH BEAM ON) 101:3(56d) Sch. GA
RX25 101L (HIGH BEAM ON)
RX8 542C (DOOR BRAKE LAMP TEST)
9008 (ABS), see Sch. IA or IB
18:7
18:18
909 (Voith), see Sch. HB
909:42
702 LHS
LX
14 14LX (ALARM CLOCK SOUND)
17 17LXA (MASTER WARNING SOUND AND 'STOP' ICON)
18 18LX (CAUTION SOUND AND 'INFO' ICON)
CECM
A3 5003A (KNEELING LAMP)
A10 510A (LAMP CHECK-)
A14 508A (PARKING BRAKE LAMP)
C1
C2
C4
C5
A1
A2
DATABUS J1587/1708
DATABUS J1939
C-BUS
9074
6 6PB (POS-GOING ROAD SPEED PULSES)
20 PB 20PB (NEG-GOING ROAD SPEED PULSES)
CM-3
"BB4":10 20SP (>20 KM/H SPEED) 11
"BB4":8 5SP (>5 KM/H SPEED) 12
4
CCAN-4
5
"BB2":12 6C (DISTANCE, 4 PULSES/M) C6
20PB (NEG-GOING ROAD SPEED PULSES) C7
6PBA (POS-GOING ROAD SPEED PULSES) B7
508AC (PARKING BRAKE LAMP) E3 508
510C (LAMP CHECK-) D1
5003A (KNEELING LAMP) D5 5003
2AA (TACHOGRAPH FEED 1) A1 709
1AC (TACHOGRAPH FEED 2) A4
13AB (WARNING/INDICATION LAMP FEED) A3
101L (HIGH BEAM ON) E7 504
"BB3":9 903 536B (REAR FOG LAMP LIT) D4 536
"BB1":6 903 5032B (DRIVER'S SEAT BELT) E4 5032
5009A (ABS NOT AVAILABLE) E15 5009
542D (DOOR BRAKE ON) E14 542
14LX (ALARM CLOCK SOUND) E1
17LXA (MASTER WARNING SOUND AND 'STOP' ICON) E12
18LX (CAUTION SOUND AND 'INFO' ICON) E6
702 CTR
CX1
CX2

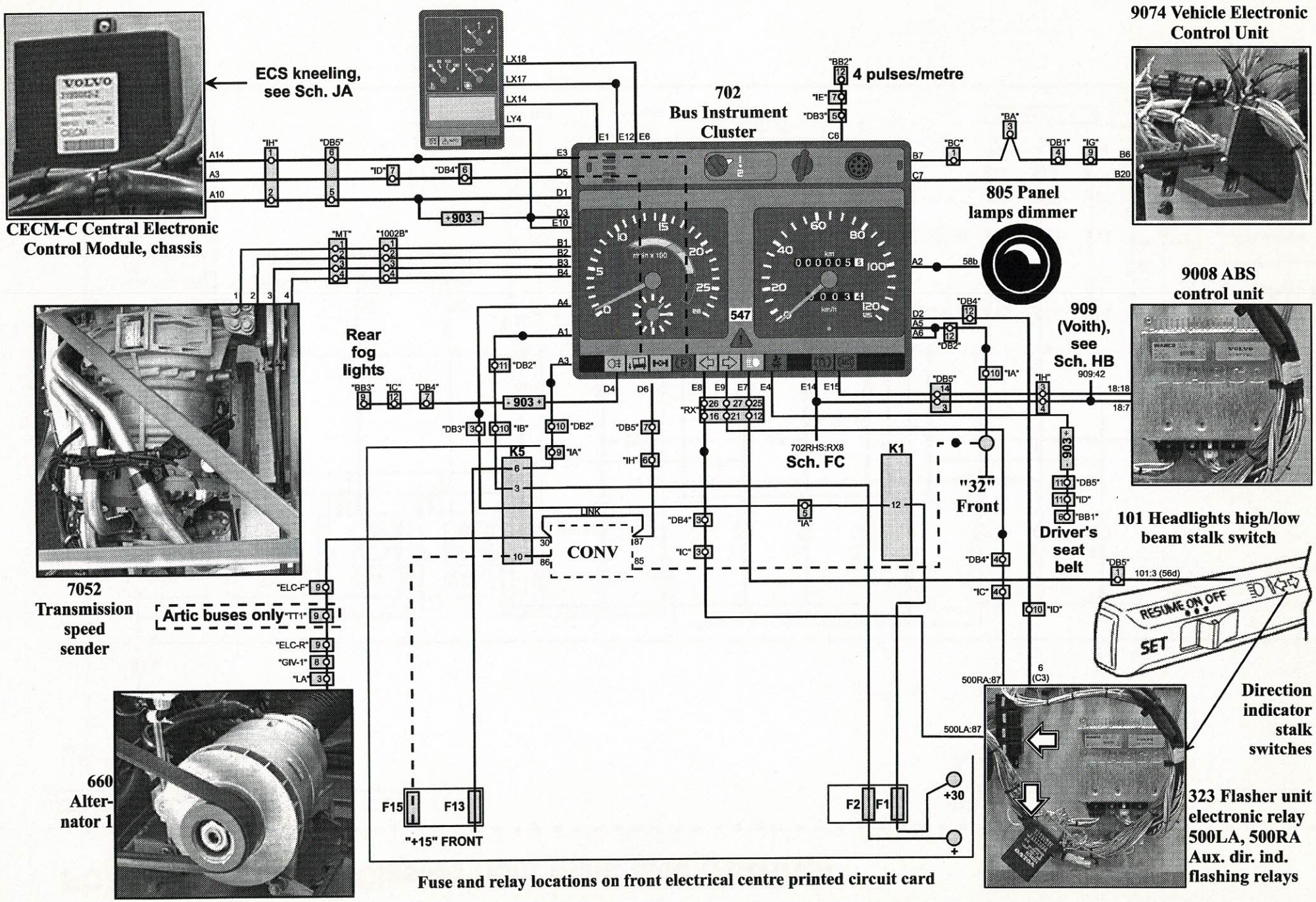

Fuse and relay locations on front electrical centre printed circuit card

FC Bus Instrument Cluster, right hand side (702RHS)

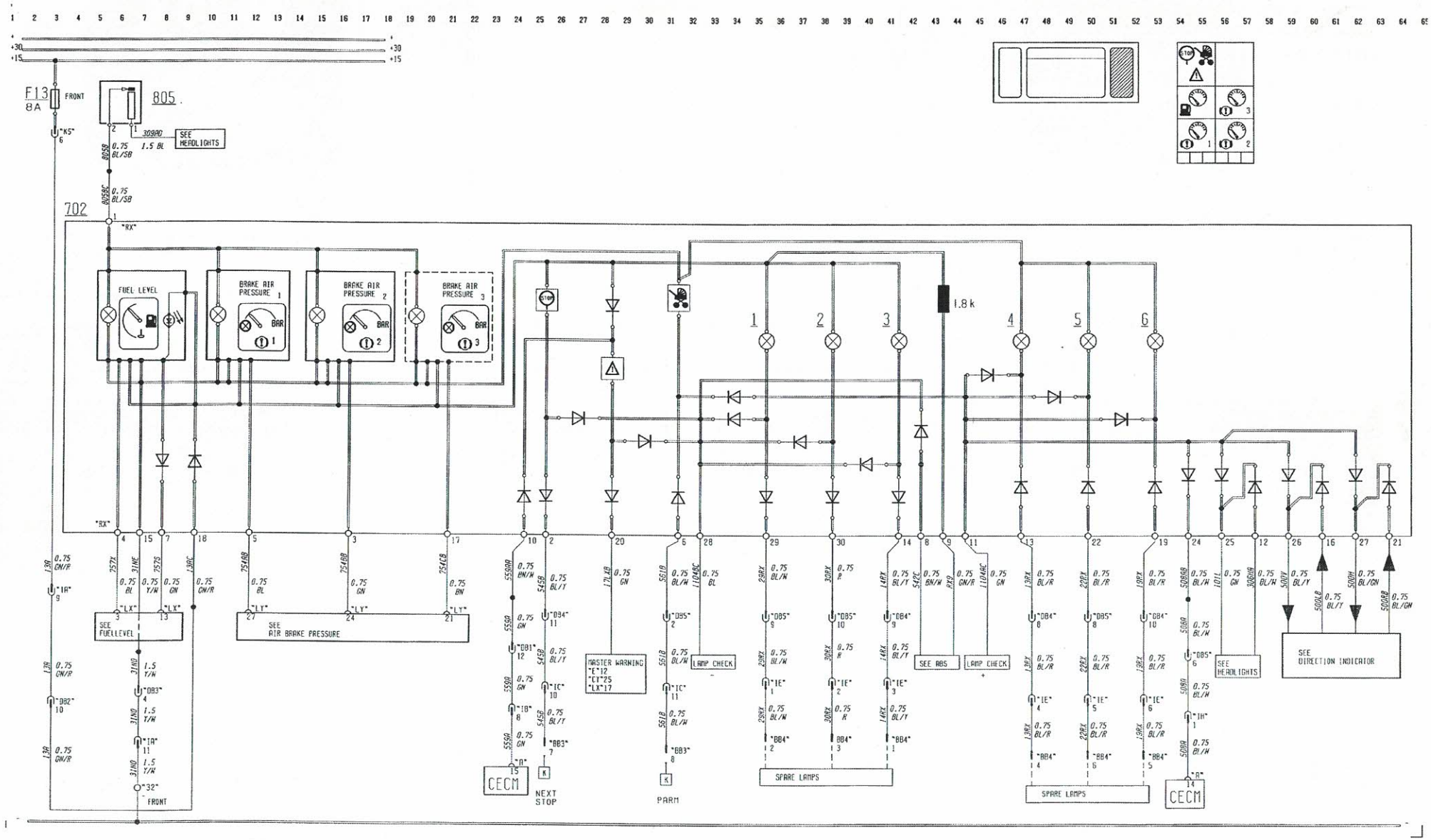

Fuses on front electrical centre card

Fuse	Rating	Circuit protected by fuse
F13	8A	"+15" feed to fuel level gauge and low fuel warning LED

No.	Component
805	Panel lamps dimmer rheostat
CECM	Central Electronic Control Module

FC Circuit descriptions

This unit carries the central warning lamp, which lights a large red triangle when a master alarm is activated. It also has the fuel gauge and all the brake pressure gauges. The perambulator and next stop warnings are also displayed by lamps integrated into this unit.

Refer to Schematic KG for a detailed explanation of the pneumatic brake pressure circuits and their gauges.

Master warning

The signal for the master warning sound, that also lights the "STOP" icon on the left side BIC unit (702LHS), is received from pin LX17 on that unit. It arrives at (702RHS) pin RX20 and lights the warning triangle icon at the top left of the unit.

Spare warning and indication lamps

A row of six lamps at the bottom of the unit can be assigned by the coachbuilder to provide warnings and indications associated with equipment that has been installed in addition to the basic Volvo bus specification. The three on the left, connected to the body via "BB4" pins 2, 3 and 1 respectively, need to be grounded to light their lamps. The three on the right, connected via "BB4" pins 4, 6 and 5 respectively, need to receive +24V inputs to be lit.

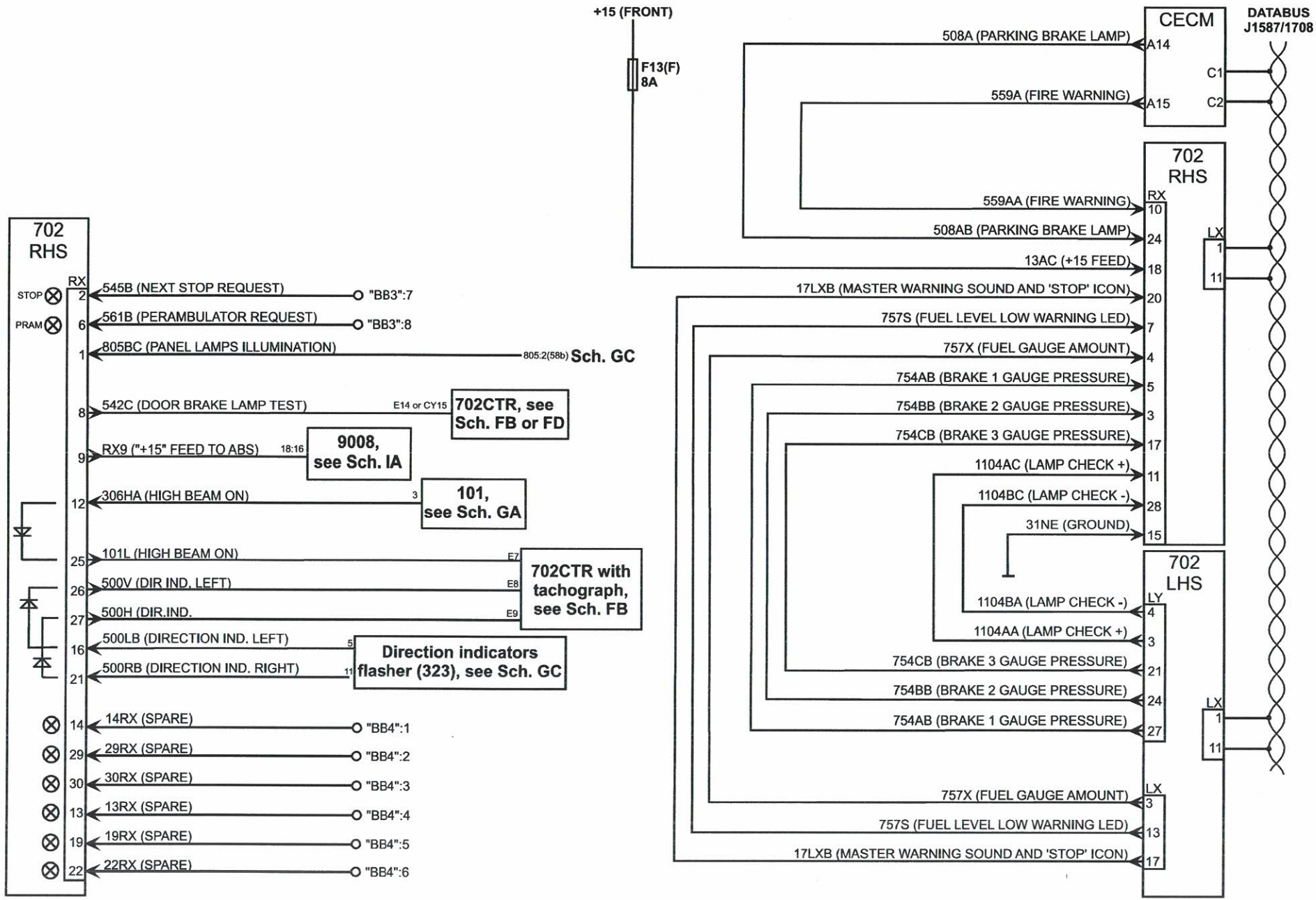
702
RHS
RX
STOP
PRAM
545B (NEXT STOP REQUEST)
"BB3":7
561B (PERAMBULATOR REQUEST)
"BB3":8
805BC (PANEL LAMPS ILLUMINATION)
805:2(58b)
Sch. GC
542C (DOOR BRAKE LAMP TEST)
E14 or CY15
702CTR, see Sch. FB or FD
RX9 ("+15" FEED TO ABS)
18:16
9008, see Sch. IA
306HA (HIGH BEAM ON)
3
101, see Sch. GA
101L (HIGH BEAM ON)
E7
500V (DIR IND. LEFT)
E8
500H (DIR.IND.
E9
702CTR with tachograph, see Sch. FB
500LB (DIRECTION IND. LEFT)
5
500RB (DIRECTION IND. RIGHT)
11
Direction indicators flasher (323), see Sch. GC
14RX (SPARE)
"BB4":1
29RX (SPARE)
"BB4":2
30RX (SPARE)
"BB4":3
13RX (SPARE)
"BB4":4
19RX (SPARE)
"BB4":5
22RX (SPARE)
"BB4":6
+15 (FRONT)
F13(F)
8A
CECM
DATABUS
J1587/1708
508A (PARKING BRAKE LAMP)
A14
559A (FIRE WARNING)
A15
C1
C2
702
RHS
559AA (FIRE WARNING)
508AB (PARKING BRAKE LAMP)
13AC (+15 FEED)
17LXB (MASTER WARNING SOUND AND 'STOP' ICON)
757S (FUEL LEVEL LOW WARNING LED)
757X (FUEL GAUGE AMOUNT)
754AB (BRAKE 1 GAUGE PRESSURE)
754BB (BRAKE 2 GAUGE PRESSURE)
754CB (BRAKE 3 GAUGE PRESSURE)
1104AC (LAMP CHECK +)
1104BC (LAMP CHECK -)
31NE (GROUND)
LX
702
LHS
LY
1104BA (LAMP CHECK -)
1104AA (LAMP CHECK +)
754CB (BRAKE 3 GAUGE PRESSURE)
754BB (BRAKE 2 GAUGE PRESSURE)
754AB (BRAKE 1 GAUGE PRESSURE)
757X (FUEL GAUGE AMOUNT)
757S (FUEL LEVEL LOW WARNING LED)
17LXB (MASTER WARNING SOUND AND 'STOP' ICON)

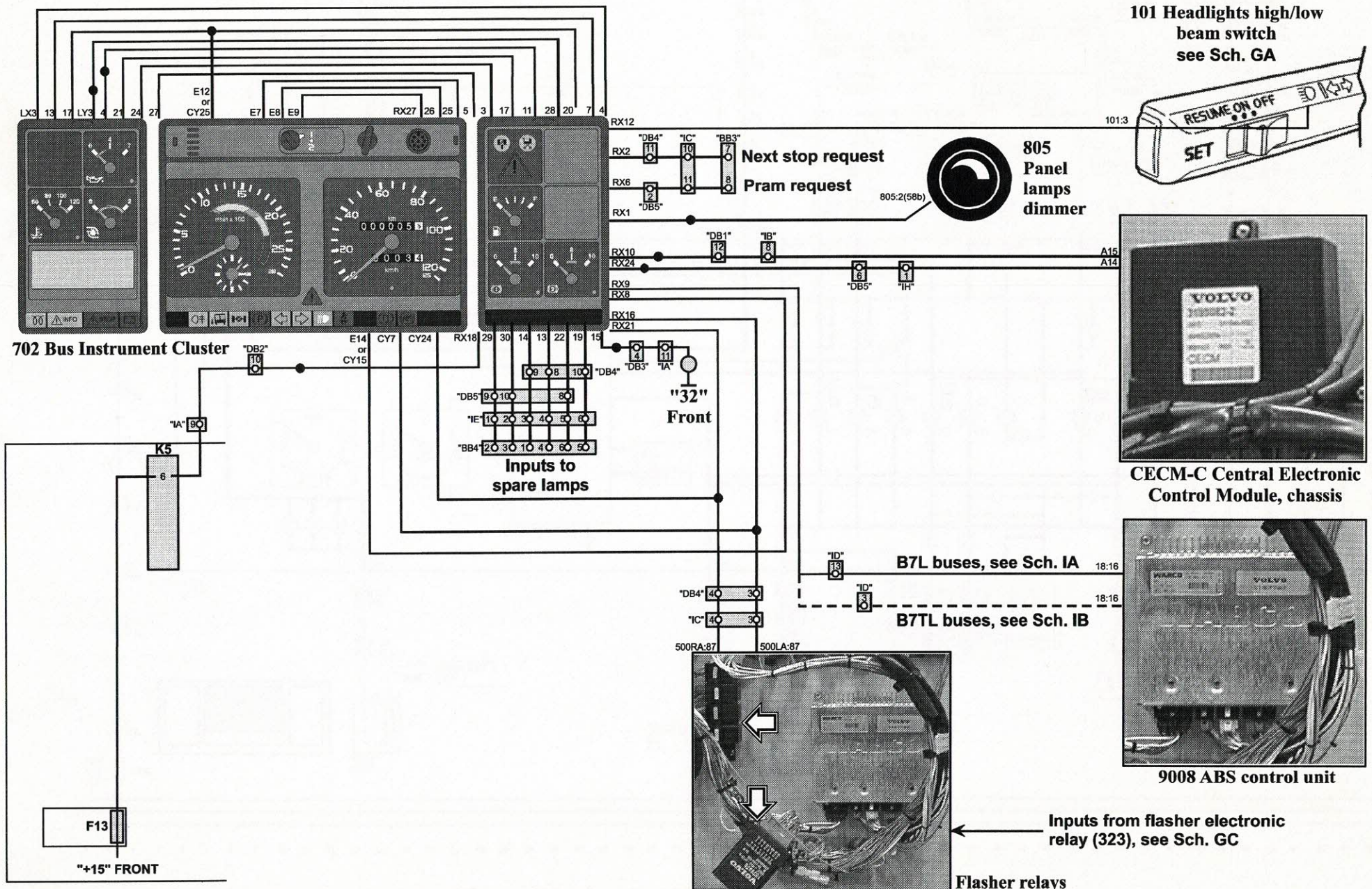

Fuse and relay locations on front electrical centre printed circuit card

FD Bus Instrument Cluster, centre, without tachograph (702CTR)

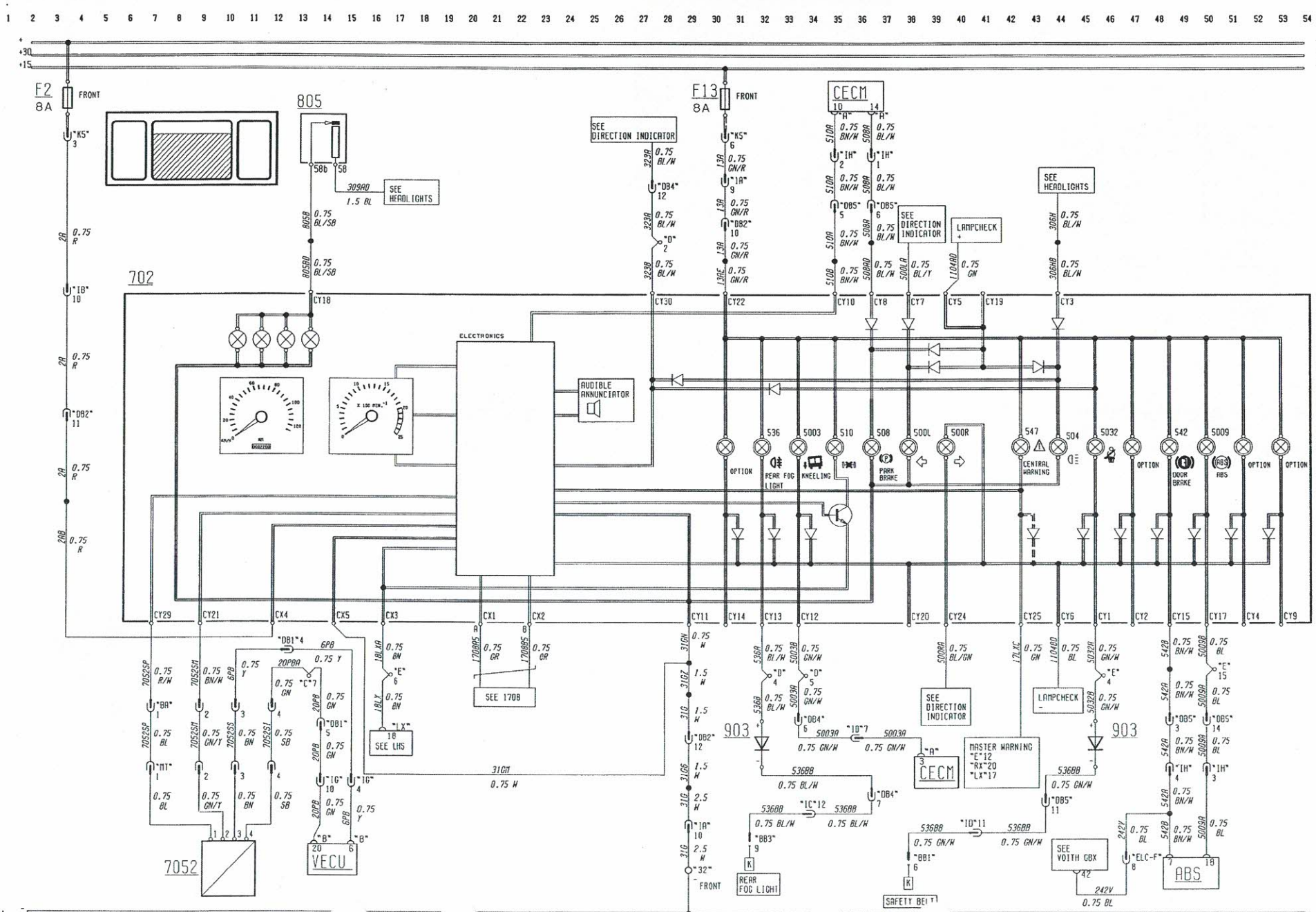

Fuses on front electrical centre card

Fuse	Rating	Circuit protected by fuse
F2	8A	"+" to electronics unit
F13	8A	"+15" feed to indicator lamps

No.	Component
500L	Direction indicators left turn indication lamp
500R	Direction indicators right turn indication lamp
504	High beam indicator lamp
508	Parking brake off warning lamp
536	Rear fog lights indicator lamp
542	Door brake warning lamp
547	Central warning lamp
702	Bus Instrument Cluster, Centre:
	Tachometer
	Odometer
	Audible annunciator
805	Panel lamps dimmer rheostat
903	Diode
5003	ECS kneel indicator lamp
5009	ABS indicator lamp
5032	Driver's seat belt warning lamp
7052	Transmission speed sender
9008	ABS control unit
9074	Vehicle Electronic Control Unit (VECU)
CECM	Central Electronic Control Module

FD Circuit descriptions

With the tachometer at the left and the speedometer at the right, this unit also has a row of warning and indication lamps along the bottom edge. It receives power from the main power feed lines in the bus front electrical centre: "+" via fuse 2 for the electronics and gauges, and "+15" via fuse 13 for the warning and indication lamps. The door brake warning lamp (542) is lit by a signal from the ABS circuit (see also Schematic IA).

Lamp test

The lamp test position of the key switch (150) or the feed switch (199), see Schematic EC, causes all the warning and indication lamps to be lit. This includes lamps that are not otherwise used to provide warnings or indications. The reason for this is to avoid "gaps" in the lit lamps that would otherwise make it look as if some bulbs had failed.

Road speed

The transmission speed sender (7052) at the transmission output provides both positive-going and negative-going speed pulses to (702CTR), at a pulse rate depending on the vehicle speed. These are converted into digitised pulse signals by circuits in (702CTR).

Signals to and from body connectors

When grounded, "BB1" pin 6 lights the warning lamp (5032) for the driver's seat belt. Similarly, when "BB3" pin 9 is grounded the rear fog lamps warning lamp (536) is lit.

Derived from the speedometer, the 5 km/h and 20 km/h speed switch signals are made available to the body connectors "BB4" pin 8 and "BB4" pin 10 respectively via the J1587/1708 databus, the CECM, the C-bus and finally Control Module CM-3 pins 11 and 12 respectively. The pin 8 signal may be used to operate door warning and interlock systems. The signal at pin 10 may be used to reactivate outside emergency door opening controls installed by the coachbuilder.

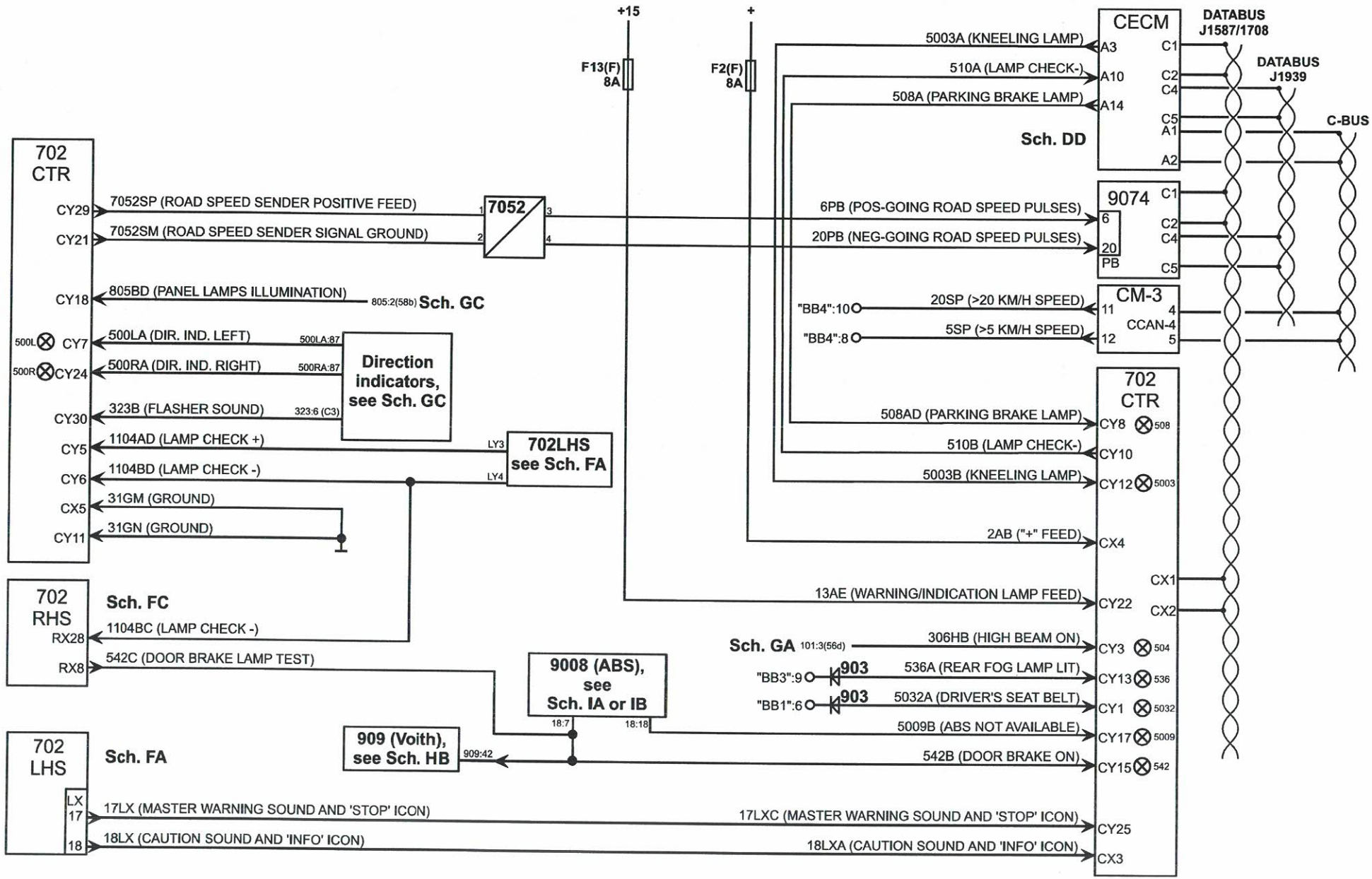
+15
+
F13(F) 8A
F2(F) 8A
CECM
DATABUS J1587/1708
DATABUS J1939
C-BUS
5003A (KNEELING LAMP)
510A (LAMP CHECK-)
508A (PARKING BRAKE LAMP)
Sch. DD
702 CTR
CY29
CY21
CY18
CY7
CY24
CY30
CY5
CY6
CX5
CY11
7052SP (ROAD SPEED SENDER POSITIVE FEED)
7052SM (ROAD SPEED SENDER SIGNAL GROUND)
7052
805BD (PANEL LAMPS ILLUMINATION)
805:2(58b) Sch. GC
500LA (DIR. IND. LEFT)
500LA:87
500RA (DIR. IND. RIGHT)
500RA:87
Direction indicators, see Sch. GC
323B (FLASHER SOUND)
323:6 (C3)
1104AD (LAMP CHECK +)
1104BD (LAMP CHECK -)
702LHS see Sch. FA
31GM (GROUND)
31GN (GROUND)
9074
6PB (POS-GOING ROAD SPEED PULSES)
20PB (NEG-GOING ROAD SPEED PULSES)
CM-3
CCAN-4
"BB4":10
"BB4":8
20SP (>20 KM/H SPEED)
5SP (>5 KM/H SPEED)
508AD (PARKING BRAKE LAMP)
510B (LAMP CHECK-)
5003B (KNEELING LAMP)
2AB ("+" FEED)
13AE (WARNING/INDICATION LAMP FEED)
Sch. GA 101:3(56d)
306HB (HIGH BEAM ON)
"BB3":9
903
536A (REAR FOG LAMP LIT)
"BB1":6
5032A (DRIVER'S SEAT BELT)
5009B (ABS NOT AVAILABLE)
542B (DOOR BRAKE ON)
702 RHS
Sch. FC
RX28
RX8
1104BC (LAMP CHECK -)
542C (DOOR BRAKE LAMP TEST)
9008 (ABS), see Sch. IA or IB
18:7
18:18
909 (Voith), see Sch. HB
909:42
702 LHS
Sch. FA
LX
17
18
17LX (MASTER WARNING SOUND AND 'STOP' ICON)
18LX (CAUTION SOUND AND 'INFO' ICON)
17LXC (MASTER WARNING SOUND AND 'STOP' ICON)
18LXA (CAUTION SOUND AND 'INFO' ICON)

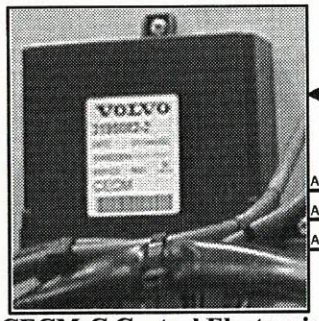

CECM-C Central Electronic Control Module, chassis

ECS kneeling, see Sch. JA

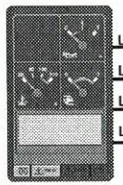

702 Bus Instrument Cluster

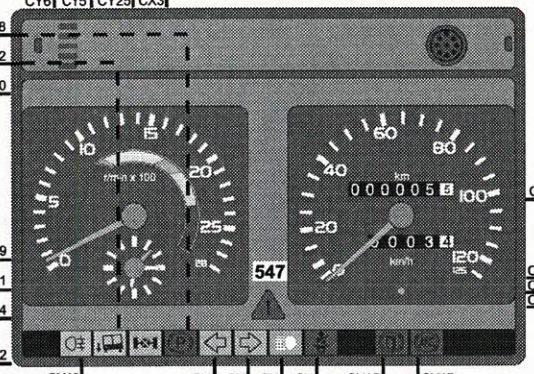

9074 Vehicle Electronic Control Unit

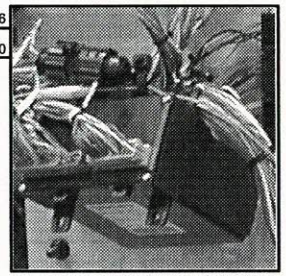

805 Panel lamps dimmer

9008 ABS control unit

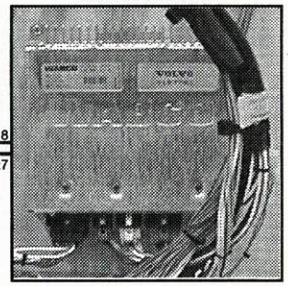

909 (Voith), see Sch. HB

Rear fog lights

702RHS, see Sch. FC

"32" Front

Driver's seat belt

101 Headlights high/low beam stalk switch

see Sch. GC

500 LA

500 RA

Direction indicator stalk switches

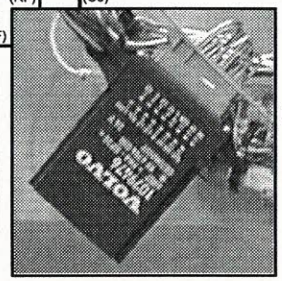

323 Flasher unit electronic relay

F13

"+15" FRONT

F2

Fuse and relay locations on front electrical centre printed circuit card

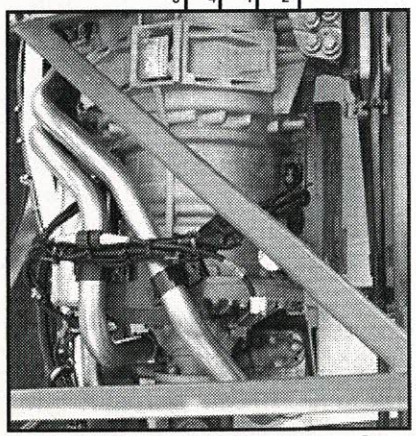

7052 Transmission speed sender

FE Buzzer

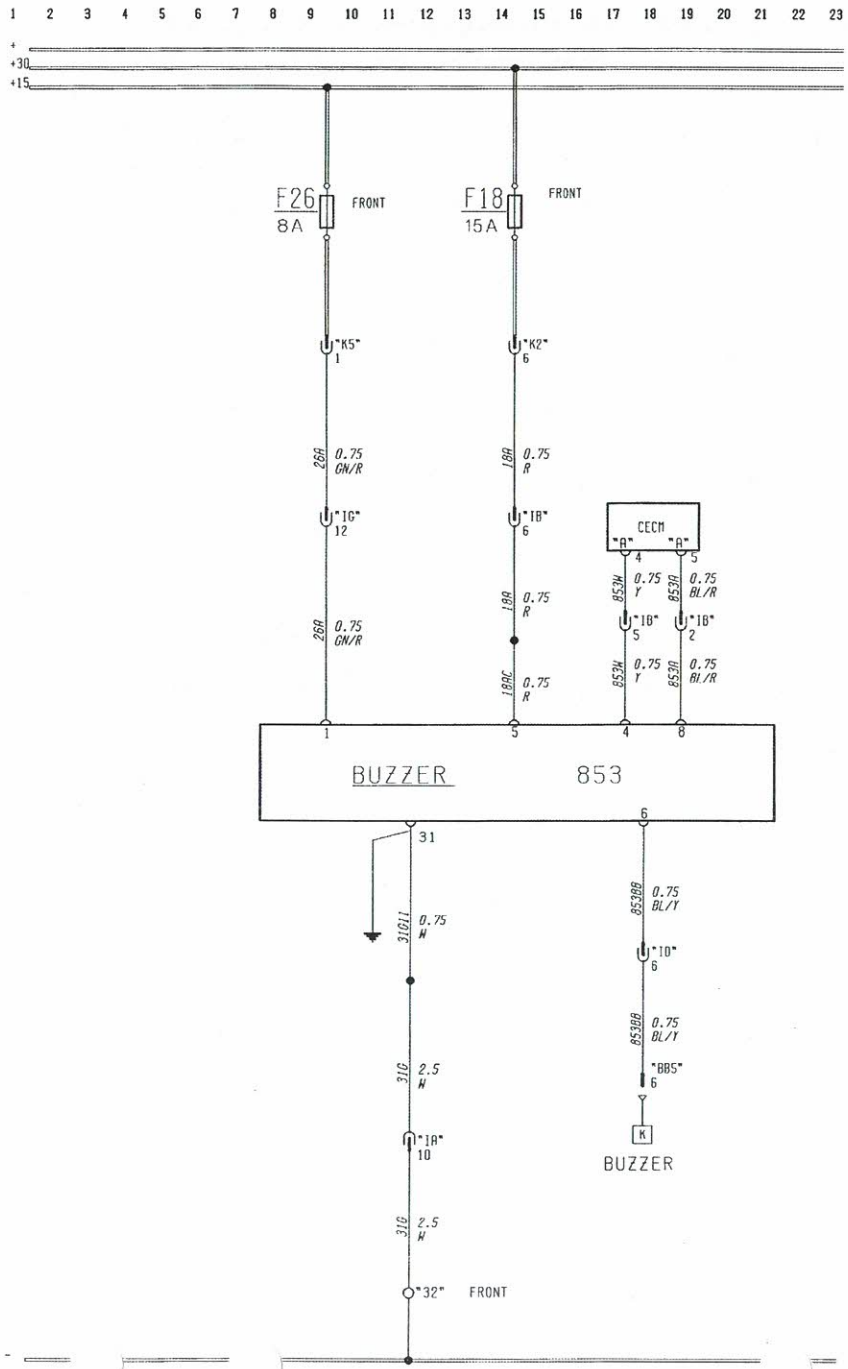
1 2 3 4 5 6 7 8 9 10 11 12 13 14 15 16 17 18 19 20 21 22 23
+
+30
+15
F26
8A
FRONT
F18
15A
FRONT
"K5"
1
"K2"
6
26A 0.75 GN/R
18A 0.75 R
"1G"
12
"1B"
6
CECM
"A" "A"
4 5
853H 0.75 Y
853A 0.75 BL/R
"1B"
5
"1B"
2
18A 0.75 R
26A 0.75 GN/R
18AC 0.75 R
853H 0.75 Y
853A 0.75 BL/R
1 3 4 8
BUZZER 853
6
31
31G11 0.75 W
853BB 0.75 BL/Y
"10"
6
853BB 0.75 BL/Y
31G 2.5 W
"BB5"
6
K
BUZZER
"1A"
10
31G 2.5 W
"32" FRONT

Fuses on front electrical centre card

Fuse	Rating	Circuit protected by fuse
F18	15A	"+30" feed to buzzer
F26	8A	"+15" feed to buzzer

No.	Component
853	Buzzer
CECM	Central Electronic Control Module

FE Circuit description

The buzzer (853) is an external component, complementing the internal audible annunciator which is part of the Bus Instrument Cluster (702). It is activated by the software programs in the case of a fire alarm or when the parking brake is off with the engine not running.

The buzzer will "ping" once every 3 seconds if the driver switches off the ignition without manually setting the parking brake. Note that the parking brake may have been set automatically during reversing if there is a risk of jack-knifing (refer to Schematic LA). Switching off the ignition will in this case release the parking brake, with the risk that the bus will start to move, especially if it is not standing on a level road.

The coachbuilder may connect an external input from the body via "BB5" pin 6 to (853) pin 6 for an additional warning.

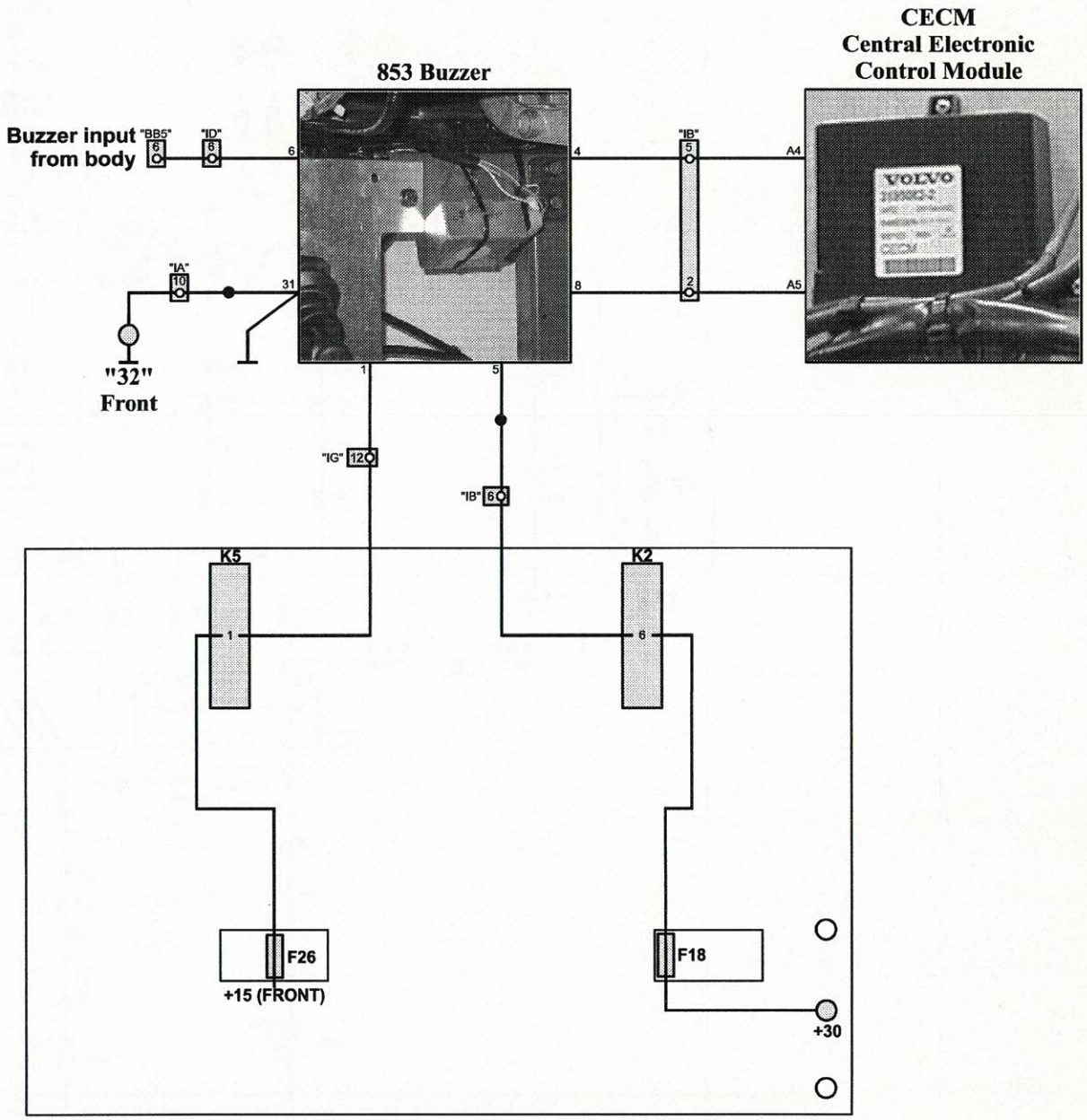

Fuse and relay locations on front electrical centre printed circuit card

GA Headlights, Parking lights

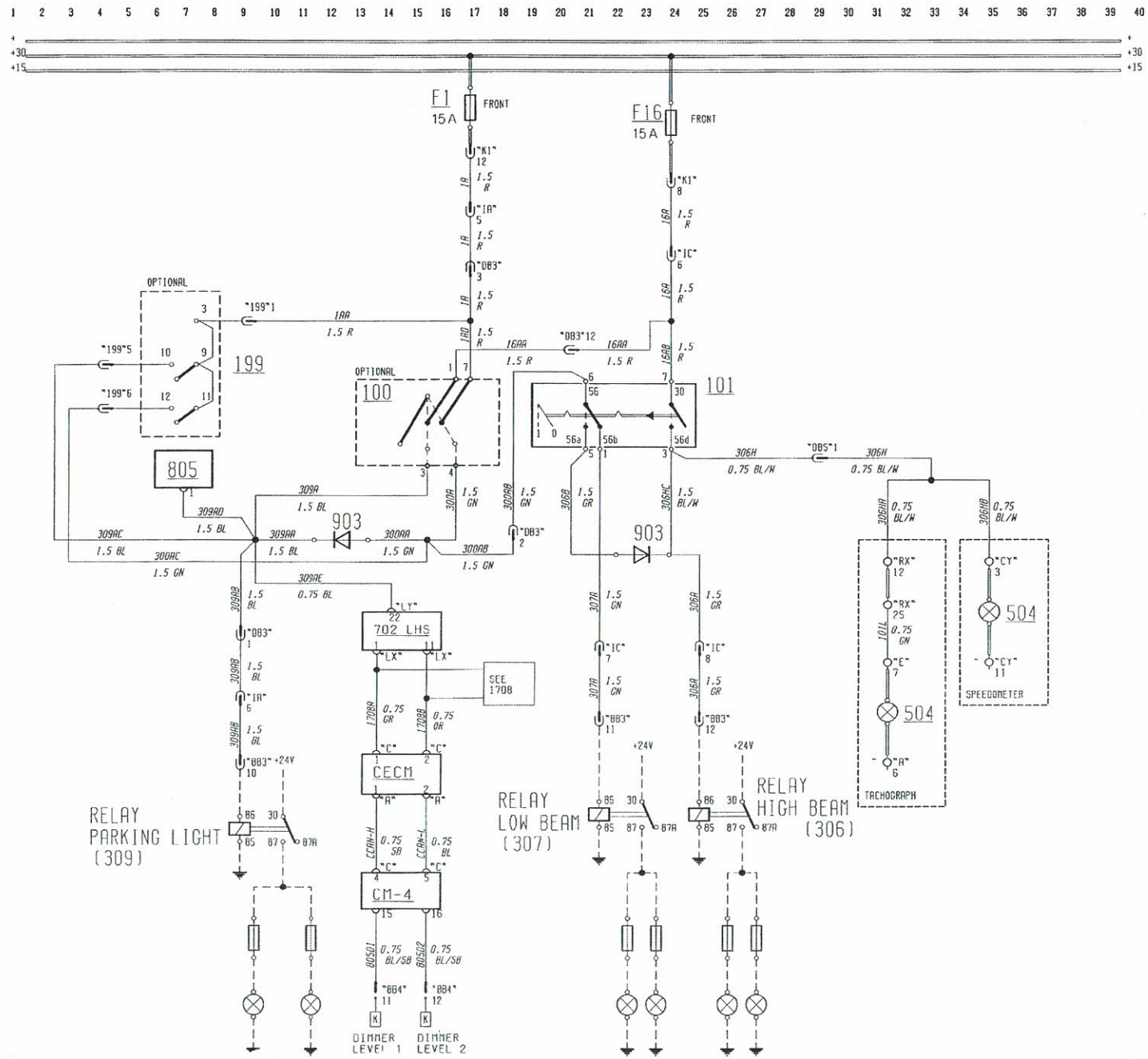

Fuses on front electrical centre card

Fuse	Rating	Circuit protected by fuse
F1	15A	"+30" feed to parking lights
F16	15A	"+30" feed to headlights high/low beam

No.	Component
100	Lighting switch (option with key switch)
101	Headlights high/low beam switch
199	Feed switch
(306)	Headlights high beam relay (external)
(307)	Headlights low beam relay (external)
(309)	Parking lights relay (external)
504	High beam indicator lamp
702LHS	Bus Instrument Cluster, Left Hand Side
805	Panel lamps dimmer rheostat
903	Diode
CECM	Central Electronic Control Module
CM-4	Control Module 4

GA Circuit descriptions

Headlights and parking lights

The headlights and parking lights supply is controlled by the lighting switch (100) in buses that are equipped with a key switch (150). Buses with a feed switch (199) have the lighting positions controlled directly from that switch. The lights are controlled by relays installed by the coachbuilder; in line with previous bus electrical schematic diagrams and Service Manuals, these external relays have been given the numbers (306), headlights high beam relay; (307), headlights low beam relay; and (309), parking lights relay; to preserve continuity.

Note that when the vehicle lighting is switched off, a signal is sent to (702LHS) pin LY22 which causes the display to revert to normal from being reversed (see also Schematic FA). The panel backlighting level used by the BIC is read internally there and transmitted via the CECM-C to Control Module 4, which provides identical DIMMER LEVEL 1 and DIMMER LEVEL 2 signal for panel lamps installed in the body by the coachbuilder. These pulsewidth modulated signals are at a constant 200Hz.

Body connections

The external relays (306), (307) and (309) are connected via body connections "BB3" pins 12, 11 and 10 respectively. These relays in turn normally feed +24V via their contacts to separate fuses for the left and right parking and headlights. Note that a minimum load of 50 mA is required by connector "BB3" pin 10 to ensure that the parking lights circuit operates correctly.

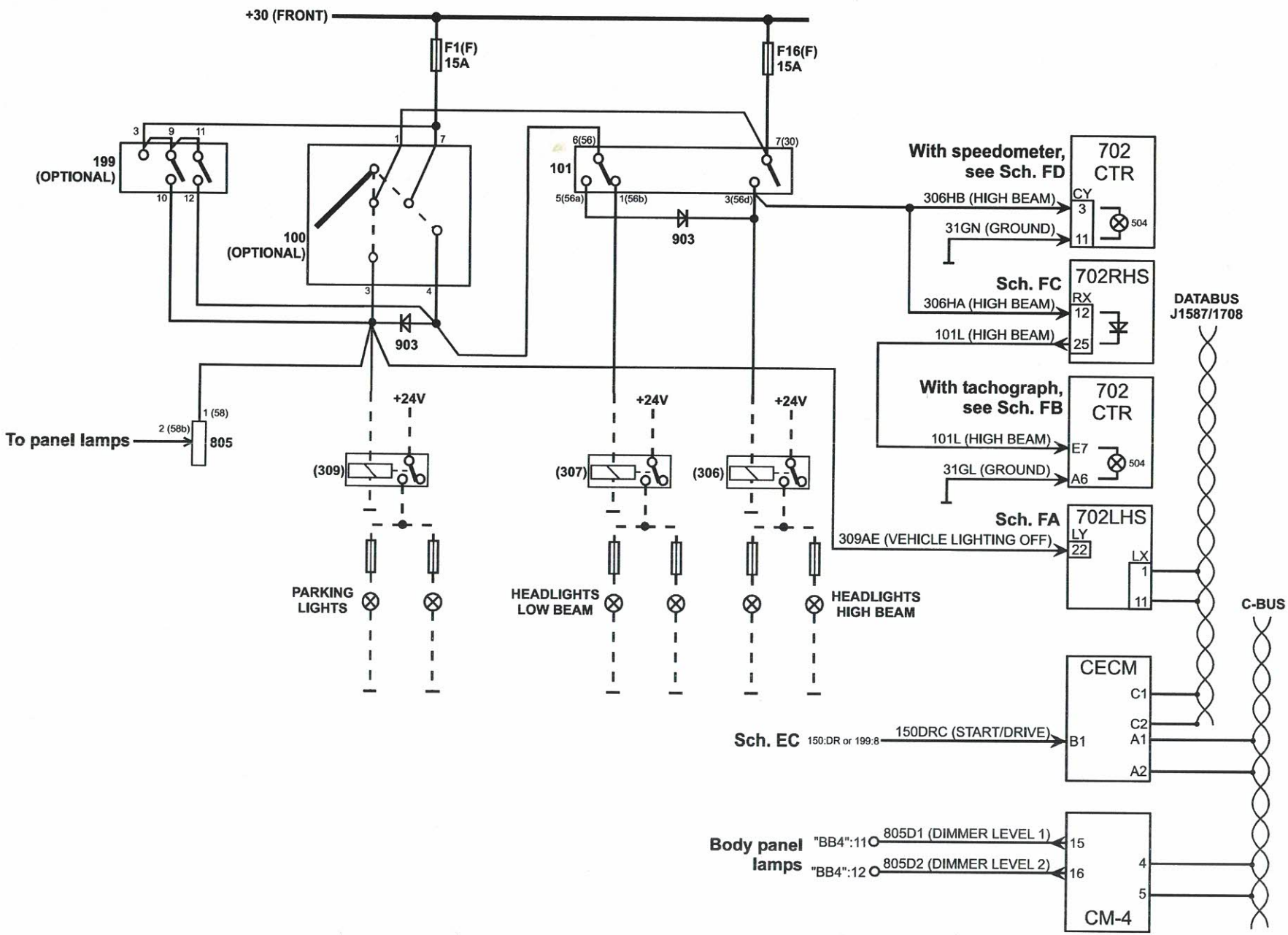
+30 (FRONT)
F1(F)
15A
F16(F)
15A
199
(OPTIONAL)
100
(OPTIONAL)
101
903
903
To panel lamps
2 (58b)
1 (58)
805
+24V
+24V
+24V
(309)
(307)
(306)
PARKING
LIGHTS
HEADLIGHTS
LOW BEAM
HEADLIGHTS
HIGH BEAM
With speedometer,
see Sch. FD
702
CTR
306HB (HIGH BEAM)
31GN (GROUND)
504
Sch. FC
702RHS
306HA (HIGH BEAM)
101L (HIGH BEAM)
With tachograph,
see Sch. FB
702
CTR
101L (HIGH BEAM)
31GL (GROUND)
504
Sch. FA
702LHS
309AE (VEHICLE LIGHTING OFF)
DATABUS
J1587/1708
C-BUS
CECM
Sch. EC
150:DR or 199:8
150DRC (START/DRIVE)
Body panel
lamps
"BB4":11
"BB4":12
805D1 (DIMMER LEVEL 1)
805D2 (DIMMER LEVEL 2)
CM-4

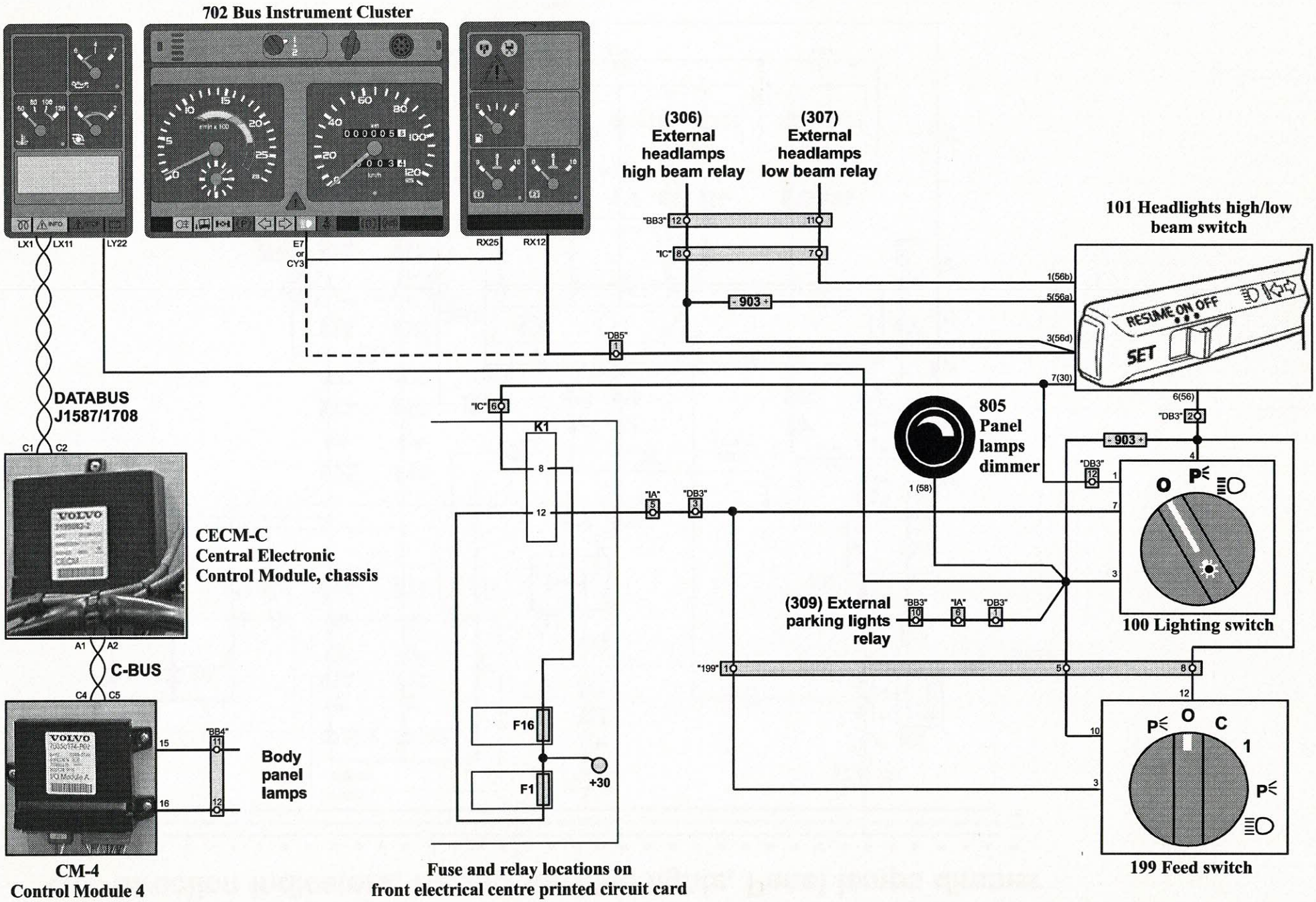
702 Bus Instrument Cluster
LX1
LX11
LY22
E7
or
CY3
RX25
RX12
(306)
External
headlamps
high beam relay
(307)
External
headlamps
low beam relay
"BB3"
"IC"
903
"DB5"
101 Headlights high/low
beam switch
RESUME ON OFF
SET
1(56b)
5(56a)
3(56d)
7(30)
6(56)
"DB3"
DATABUS
J1587/1708
C1
C2
805
Panel
lamps
dimmer
1 (58)
K1
"IA"
"DB3"
CECM-C
Central Electronic
Control Module, chassis
A1
A2
C-BUS
C4
C5
(309) External
parking lights
relay
"BB3"
"IA"
"DB3"
100 Lighting switch
"199"
"BB4"
Body
panel
lamps
F16
F1
+30
199 Feed switch
CM-4
Control Module 4
Fuse and relay locations on
front electrical centre printed circuit card

GC Direction indicators, Hazard warning lights, Panel lamps dimmer

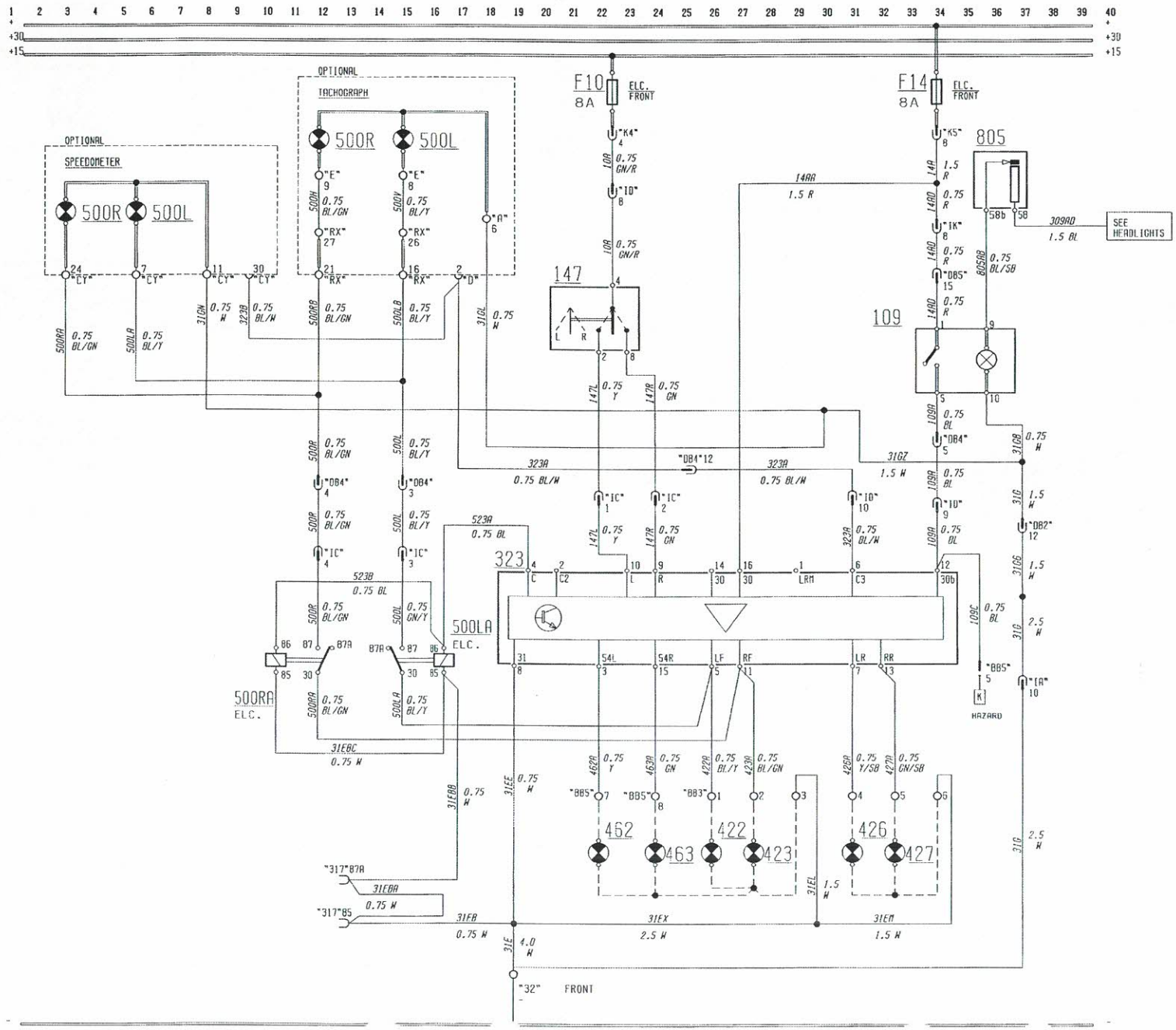

Fuses on front electrical centre card

Fuse	Rating	Circuit protected by fuse
F10	8A	"+15" feed to direction indicators
F14	8A	"+" feed to hazard warning lights

No.	Component
109	Hazard warning lights switch
147	Direction indicators switch
323	Flasher unit electronic relay
422	Direction indicator bulb, left front
423	Direction indicator bulb, right front
426	Direction indicator bulb, left rear
427	Direction indicator bulb, right rear
462	Direction indicator bulb, left side/roof edge
463	Direction indicator bulb, right side/roof edge
500L	Direction indicators indication lamp, left
500LA	Auxiliary left direction indicators flashing relay
500R	Direction indicators indication lamp, right
500RA	Auxiliary right direction indicators flashing relay
805	Panel lamps dimmer rheostat

GC Circuit descriptions

Direction indicator lamps installation

The coachbuilder has to install the direction indicator lamps, using the connections at "BB3" pins 1 to 6 inclusive, and also "BB5" pins 7 and 8 if required. The maximum load for each of these lamp circuits is 24V/21W.

Direction indicator lamps operation

The "+15" supply is fed via the direction indicators switch (147) to pin 10 or pin 9 of the flasher unit electronic relay (323), depending on whether a left or right indication is required, respectively. The electronic relay (323) receives its "+" power feed from fuse F14 in the front electrical centre, via pin 16.

The electronic relay (323) provides intermittent high (+24V) outputs via pins 5(LF) and 7(LR) (for left indication) or 11(RF) and 13(RR) (for right indication) to the external direction indicator lamps (422/426) or (423/427) as required. It also intermittently energises the parallel-wired coils of relays (500LA) and (500RA) via (323) pin 4. Depending on whether left turn or right turn indication has been selected, the indicator lamps (500L) or (500R) on the display flash on and off, controlled by the outputs from (323) pins 5 (LF) or 11 (RF) respectively for left or right indications.

If one or more of the external lamps (422/426) or (423/427) fails, (323) pin 4 output stops pulsing on and off, the relays (500LA) and (500RA) stop switching on and off, and the associated lamp (500L) or (500R) on the instrument panel stops flashing. The driver then knows that one of the exterior lamps has failed or that there is a fault in the external circuit. This is a legal requirement in certain markets.

Electronic relay (323) outputs 3(54L) and 15(54R) feed flashing lamps (462) and (463), which are externally wired and located on the side and/or roof edge at the rear of the bus. There is no provision for the driver to check whether these lamps or circuits have failed, nor is there a legal requirement for such provision.

Hazard warning lamps

The hazard warning flashers, initiated by switch (109) sending a high signal to pin 12. This causes both the left and right signal outputs to be energised, at (323) pins 5 and 11, along with the relay output at pin 4.

An additional hazard flashers output is provided at body connector "BB5" pin 5, derived from the flasher switch (109).

Panel lamps dimmer rheostat

If the ignition is on, signalled by the 150 DRC start/drive input at the CECM-C pin B1 from the key switch (150) or feed switch (199), the panel lamps dimmer circuit is enabled. For the Bus Instrument Cluster panel lamps, the analog input is used, direct from the rheostat (805). However, the coachbuilder may have added further panel lamps, and in this case, additional lamp power has to be provided externally. This is provided as DIMMER LEVEL 1 and 2 signals from Control Module 4, as described in Schematic GA.

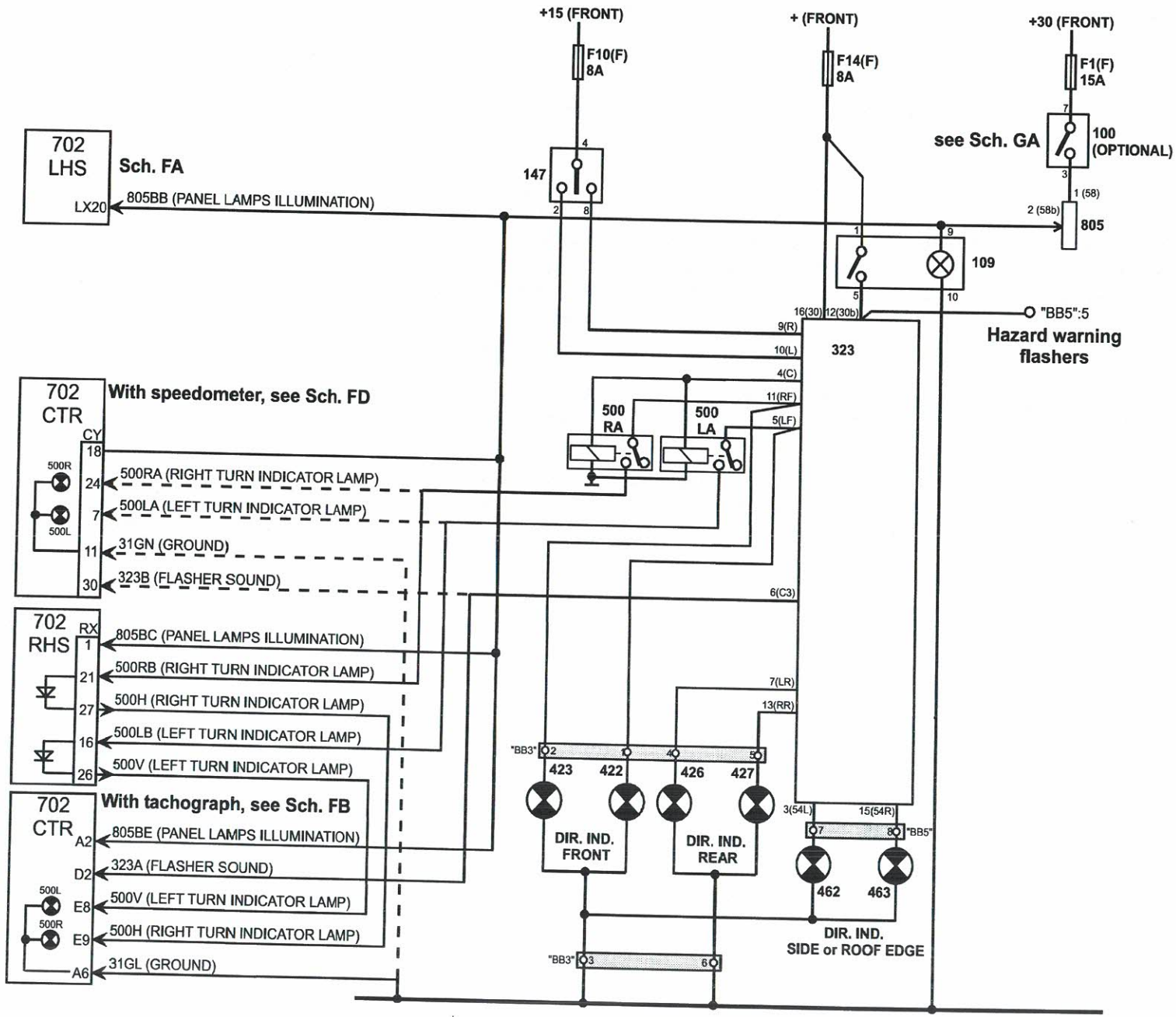
+15 (FRONT)
F10(F)
8A
+ (FRONT)
F14(F)
8A
+30 (FRONT)
F1(F)
15A
see Sch. GA
100
(OPTIONAL)
702
LHS
Sch. FA
LX20
805BB (PANEL LAMPS ILLUMINATION)
147
805
109
"BB5":5
Hazard warning
flashers
323
702
CTR
With speedometer, see Sch. FD
CY
500R
500L
500RA (RIGHT TURN INDICATOR LAMP)
500LA (LEFT TURN INDICATOR LAMP)
31GN (GROUND)
323B (FLASHER SOUND)
500
RA
500
LA
702
RHS
RX
805BC (PANEL LAMPS ILLUMINATION)
500RB (RIGHT TURN INDICATOR LAMP)
500H (RIGHT TURN INDICATOR LAMP)
500LB (LEFT TURN INDICATOR LAMP)
500V (LEFT TURN INDICATOR LAMP)
702
CTR
With tachograph, see Sch. FB
805BE (PANEL LAMPS ILLUMINATION)
323A (FLASHER SOUND)
500V (LEFT TURN INDICATOR LAMP)
500H (RIGHT TURN INDICATOR LAMP)
31GL (GROUND)
"BB3"
423
422
426
427
DIR. IND.
FRONT
DIR. IND.
REAR
"BB5"
462
463
DIR. IND.
SIDE or ROOF EDGE

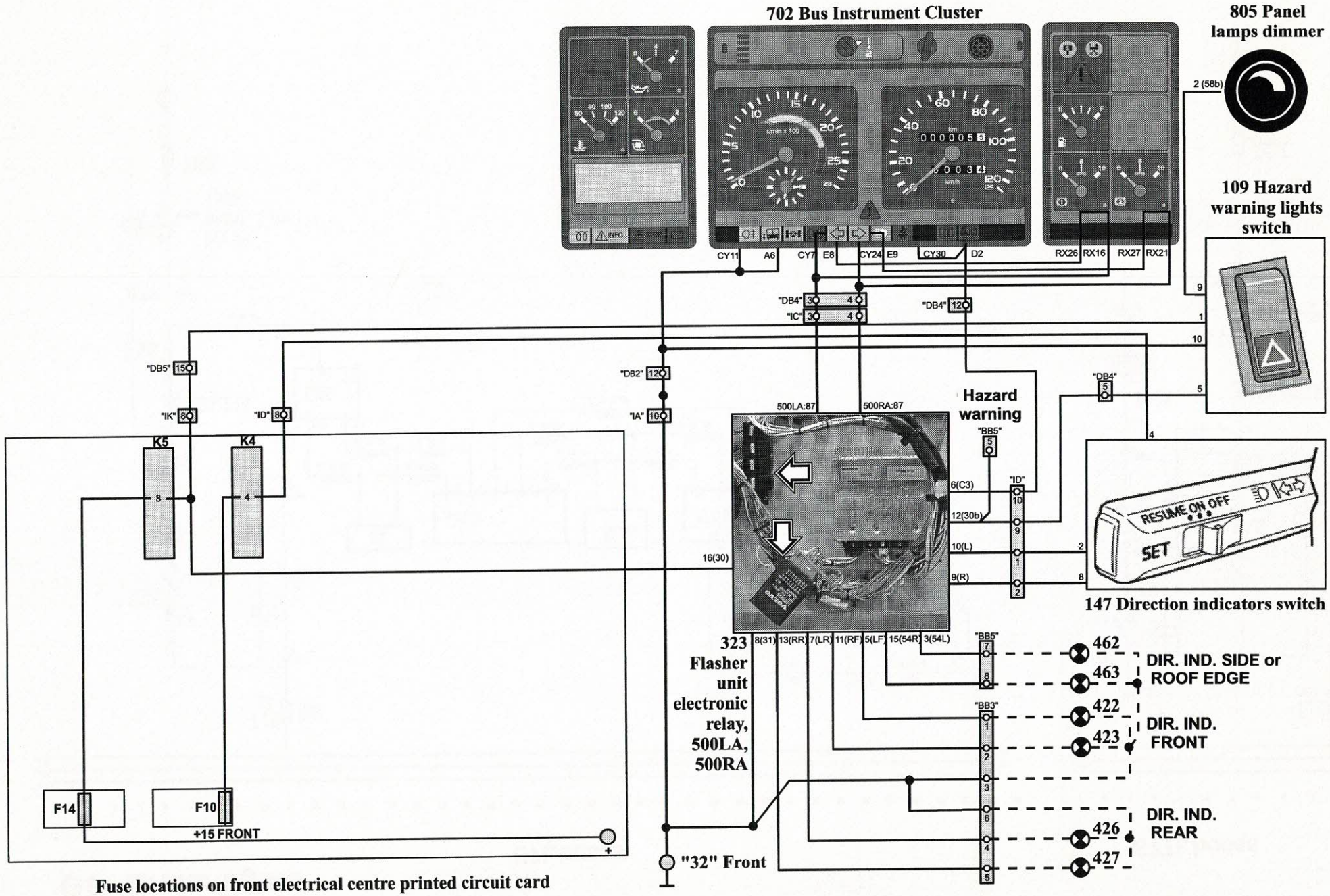
702 Bus Instrument Cluster
805 Panel lamps dimmer
109 Hazard warning lights switch
147 Direction indicators switch
Hazard warning
323 Flasher unit electronic relay, 500LA, 500RA
DIR. IND. SIDE or ROOF EDGE
DIR. IND. FRONT
DIR. IND. REAR
"32" Front
+15 FRONT
Fuse locations on front electrical centre printed circuit card
CY11
A6
CY7
E8
CY24
E9
CY30
D2
RX26
RX16
RX27
RX21
"DB4"
"IC"
"DB5"
"IK"
"ID"
"DB2"
"IA"
"BB5"
"BB3"
K5
K4
F14
F10
500LA:87
500RA:87
6(C3)
12(30b)
10(L)
9(R)
16(30)
8(31)
13(RR)
7(LR)
11(RF)
5(LF)
15(54R)
3(54L)
462
463
422
423
426
427
RESUME ON OFF
SET

GD Brake lights

B7L buses

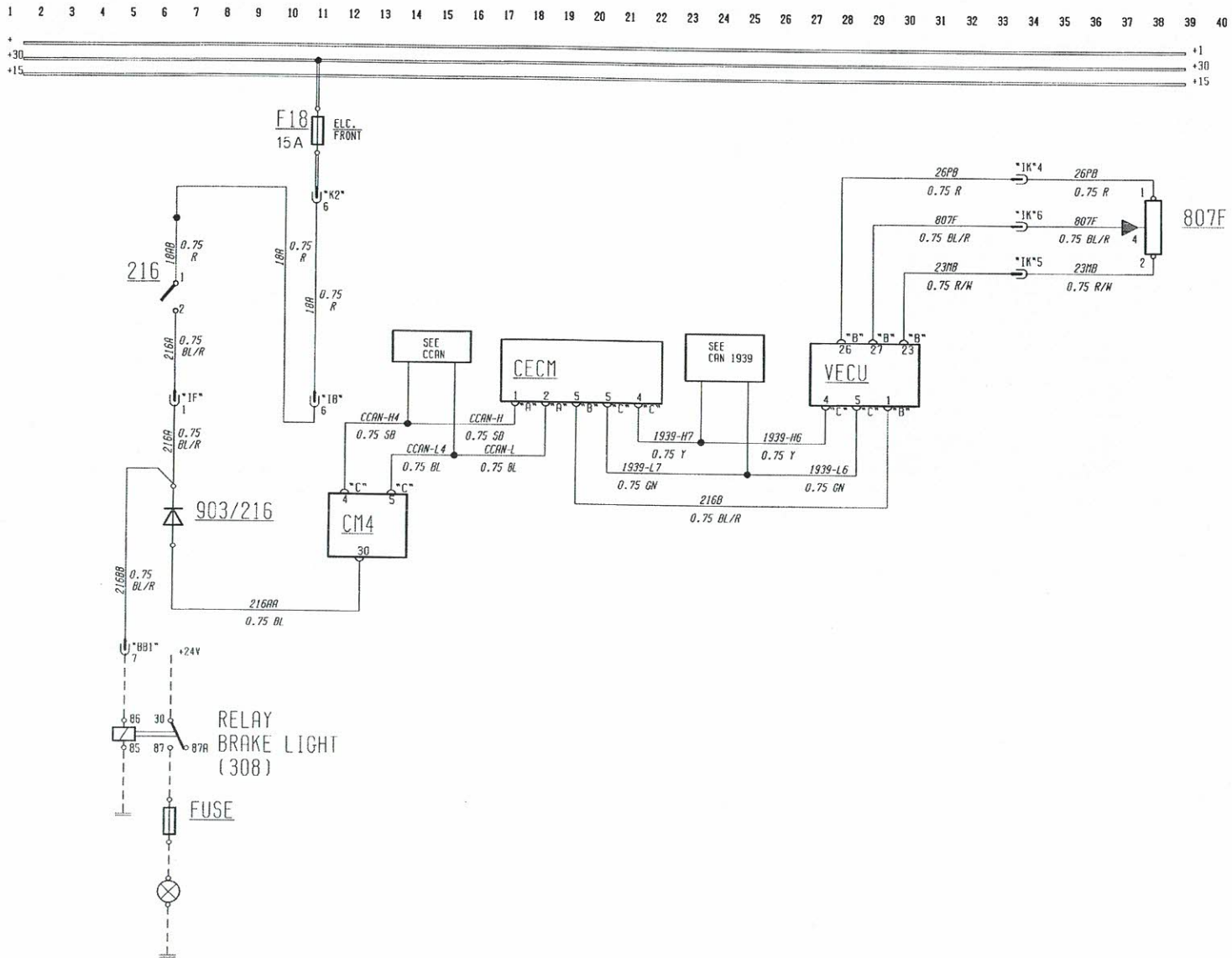

B7TL buses

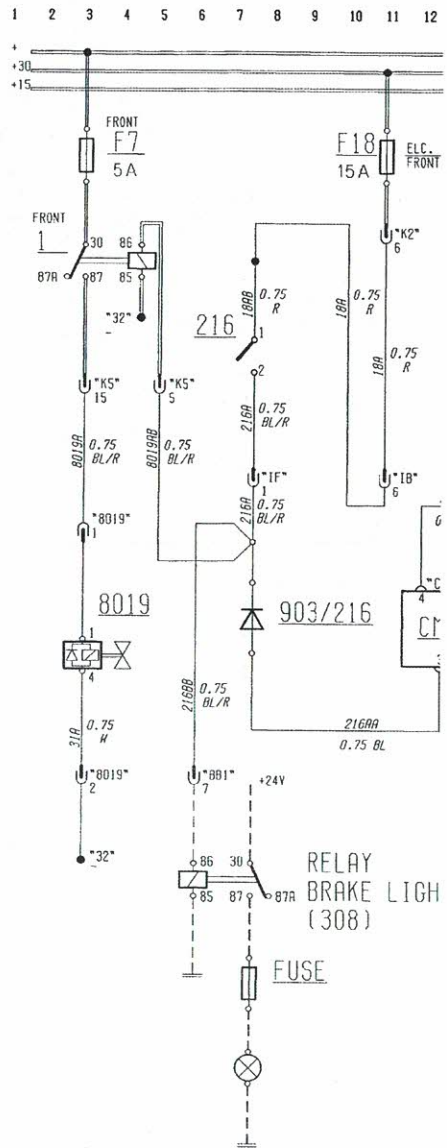

Fuses and relay on front electrical centre card

Fuse	Rating	Circuit protected by fuse
F7	5A	Oil separator solenoid valve
F18	15A	Brake lights

Relay	Circuit
RL1	Oil separator solenoid valve

No.	Component
216	Brake lights closing contact
(308)	Brake lights relay (external)
807F	Retarder foot control
903/216	Diode, brake lights closing contact
8019	Oil separator solenoid valve
9074	Vehicle Electronic Control Unit
CECM	Central Electronic Control Module
CM-4	Control Module 4

GD Circuit description

B7L buses

When the footbrake is applied, the increased pressure in the brake pneumatic circuit closes the brake lights closing contact (216) to apply a +24V "+30" voltage to the brake lights relay (308) installed by the coachbuilder. The relay contact closes to switch on the brake lights, which are powered from a separate +24V supply. If the retarder has been applied, the signal at pin 27 of the Vehicle Electronic Control Unit (9074) is passed on via pin 1 to the Central Electronic Control Module (CECM-C) pin B5, and then further via the C-bus to Control Module 4 pin 30, which applies +24V to relay (308) via diode (903/216).

Body connection

Body connector "BB1" pin 7 supplies an active high +24V output when the retarder or footbrake are applied, providing there is air pressure in the brake system, as there normally should be. The coachbuilder has to install a relay (labelled (308) on this diagram) and two fuses, one each for the left and right side brake lights.

B7TL buses, Pneumatic system oil separator

Every time the footbrake is applied, relay RL1 in the front electrical centre is energised to activate the oil separator solenoid valve (8019) in the bus pneumatic system (which among other things is used to operate the brakes).

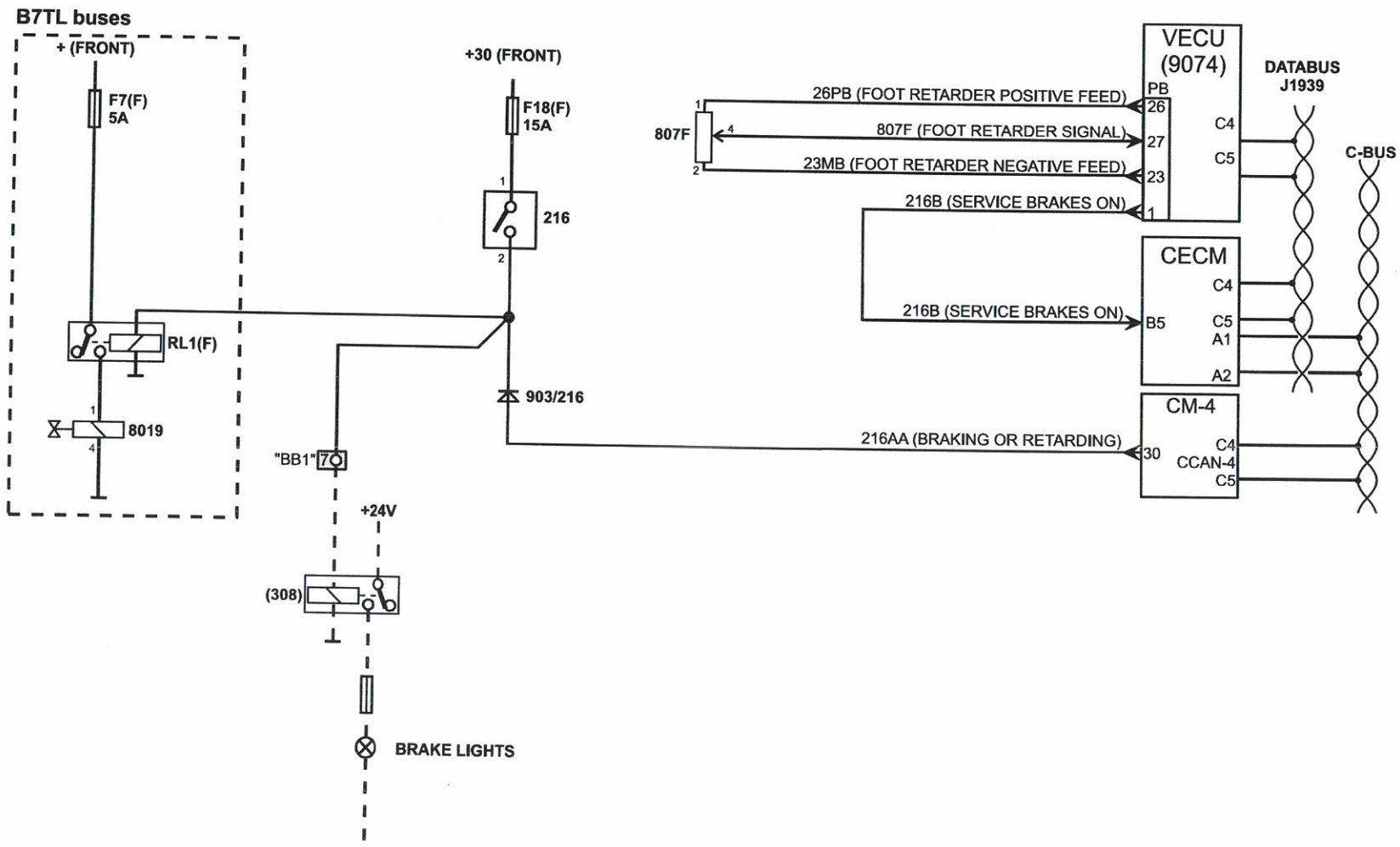
B7TL buses
+ (FRONT)
F7(F)
5A
RL1(F)
8019
+30 (FRONT)
F18(F)
15A
216
903/216
"BB1"
+24V
(308)
BRAKE LIGHTS
807F
26PB (FOOT RETARDER POSITIVE FEED)
807F (FOOT RETARDER SIGNAL)
23MB (FOOT RETARDER NEGATIVE FEED)
216B (SERVICE BRAKES ON)
VECU
(9074)
PB
26
27
23
1
C4
C5
DATABUS
J1939
C-BUS
CECM
B5
C4
C5
A1
A2
216B (SERVICE BRAKES ON)
CM-4
30
C4
CCAN-4
C5
216AA (BRAKING OR RETARDING)

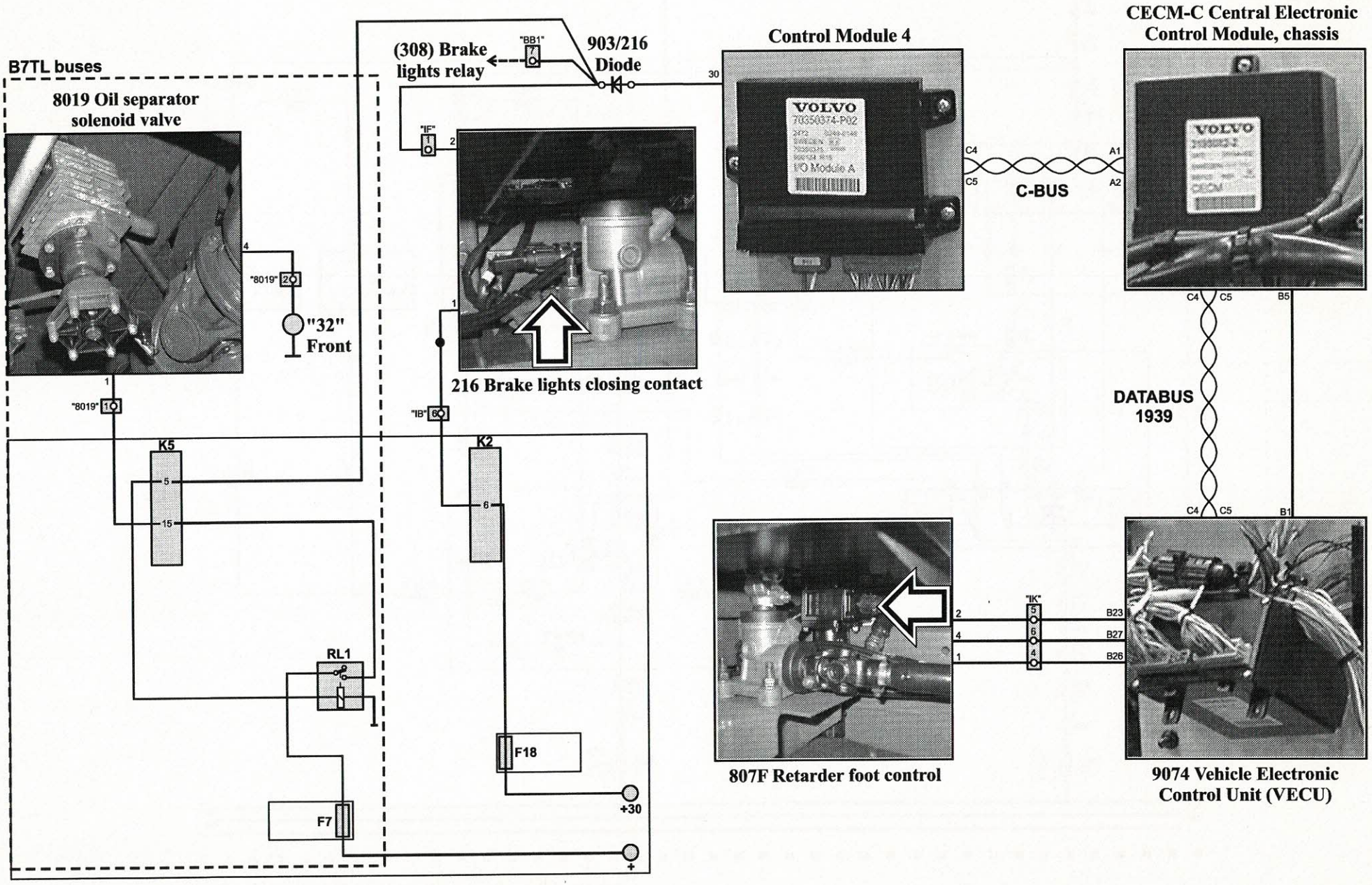

Fuse and relay locations on front electrical centre printed circuit card

GF Windscreen wipers and washers

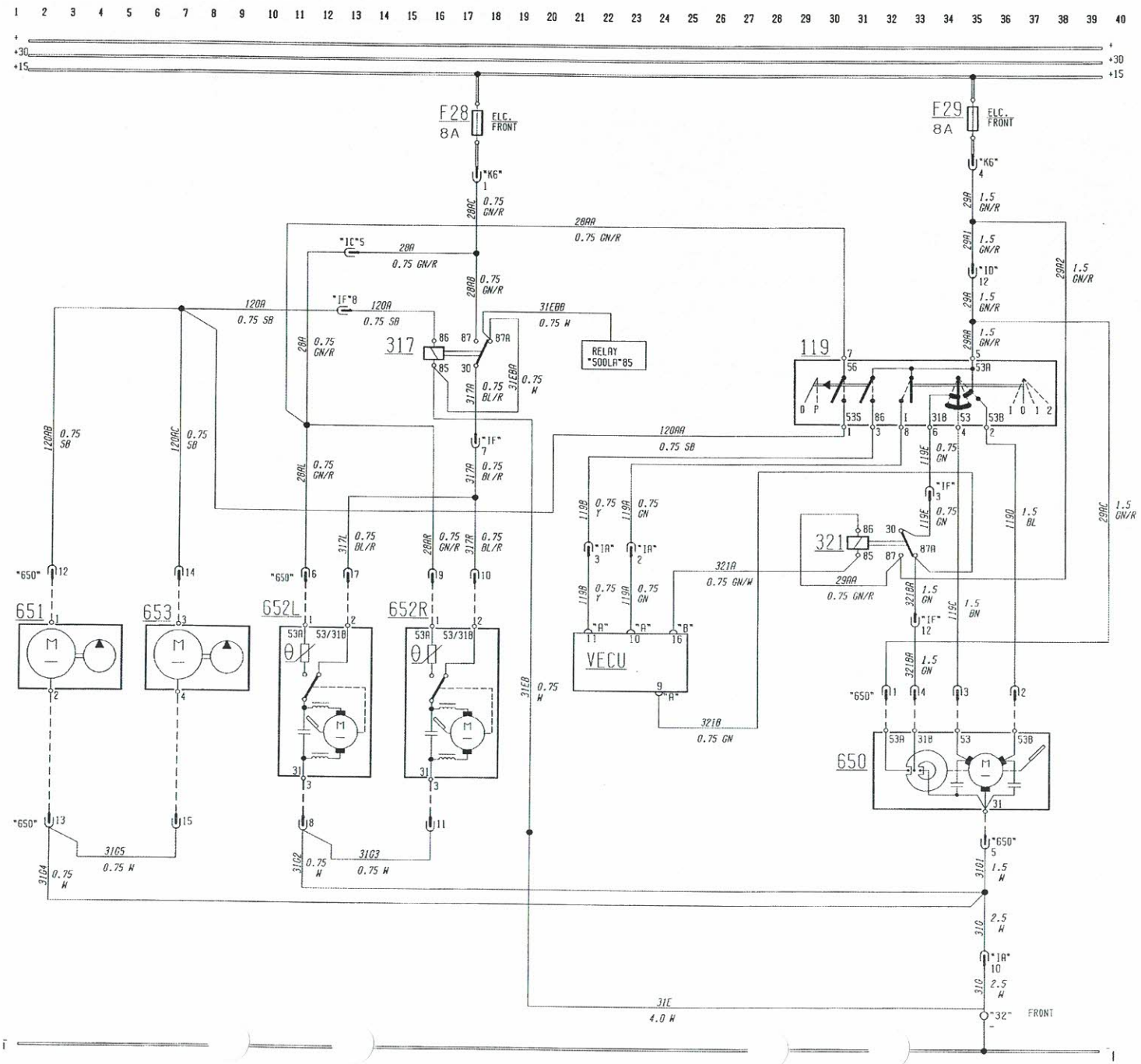

Fuses on front electrical centre card

Fuse	Rating	Circuit protected by fuse
F28	8A	Windscreen washers, headlamps wash/wipe
F29	8A	Windscreen wipers

No.	Component
119	Windscreen wash/wipe stalk switches
317	Headlight wiper relay
321	Windscreen interval wiping relay
650	Windscreen wiper motor
651	Windscreen washer pump motor
652L	Headlight wiper motor, left
652R	Headlight wiper motor, right
653	Headlight washer pump motor
9074	Vehicle Electronic Control Unit

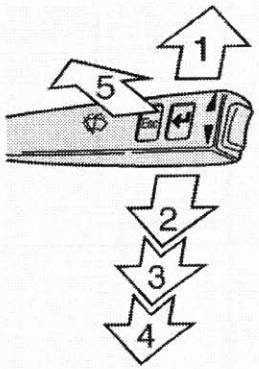

GF Circuit descriptions

All the windscreen washer and wiper components are connected by the coachbuilder through electrical connector "650". The maximum permissible rating for the windscreen wiper motor is 16 amperes, and the maximum permissible ratings for the other externally-installed wash/wipe components are 10 amperes each.

Windscreen and headlamp wipers

1. *Interval wiping* When the stalk switch (119) is lifted by the driver to position 1 for interval wiping, "+15" from F29 (front) is applied to pin 8 of the switch. This presents a high digital input to the VECU (9074) pin A10. The VECU software then initiates a low digital output at pin B16 which energises the interval relay (321). The resulting +24V output from the relay pole, pin 30, is applied to the windscreen wiper motor (650) via (119) pins 6 and 4 to begin the first wipe sequence. Pin 53A of the motor (650) has a permanent "+15" connection via F29 (front). As soon as the motor (650) starts to move the wipers away from the parked position, the disc connected to the motor pin 31B contacts the +24V at pin 53A, sending a low to high voltage transition to the VECU (9074) pin A9. The software in the VECU measures the time it takes from this transition until the complete rotation of the wiper motor and disc cause a further transition from high to low. This time interval is divided by two and defines a new deactivation time, which remains valid until the driver switches off the stalk switch.

The default value for the intermittent wiping time is 10 seconds, which will normally be the delay between wipes when interval is selected. However, this delay can be altered by the driver to any value between 1 and 10 seconds. This is done by switching to normal (position 3), then after the desired delay (of less than 10 seconds) to interval. These two pulse inputs are recorded by the software, which uses them to define the interval delay for intermittent wiping, until interval wiping is de-selected again, when the system reverts to the 10 second default delay time.

If a low to high transition is not detected at the VECU pin A9 within 10 seconds, it is assumed that the wiper blades are frozen to the windscreen or are otherwise prevented from moving. The VECU then deactivates the interval relay (321) and enters an off mode, remaining there until the driver sets the stalk switch off.

2. *Momentary wiping* This first downward position of the stalk switch (119) is sprung, so that it returns to off when released, permitting the driver to choose wiping for as long as it is held down. While selected, this applies "+15" from F29 (front) via (119) pin 4 to pin 53 of the windscreen wiper motor (650) to start it moving. There is no high digital input to pin A10 of the VECU, so the software knows when it receives the high transition at pin A9 from the motor (650) pin 31B that this is not an interval wipe request. When the switch (119) is released to the off position, the current wipe cycle is completed because the normally-closed contact (pin 87a) of relay (321) continues to receive +24V from the motor disc, through pin 31B, until the disc has turned to its park position and becomes grounded from pin 31.

3. *Normal wiping* In this position, the wiper motor (650) is energised via pin 4 of the switch (119) and remains activated until the switch is moved to another position. If switched off, the current cycle is completed as described for momentary wiping above.

4. *Fast wiping* This applies the "+15" supply from F29 (front) to (119) pin 2, thereby to (650) pin 53B, so that the wiper motor (650) runs at full speed. If switched off, the current cycle is completed as described for momentary wiping above.

5. *Wash/wipe* This applies "+15" from F28 (front) via (119) pin 1 to energise the headlight wiper relay (317) and the two washer pump motors (651) and (653). The relay contact feeds pins 53/31B of the two headlamp wiper motors (652L) and (652R). At the same time, (119) pin 3 presents a high digital input to the VECU (9074) pin A11, which causes the VECU software to run the motor (650) for as long as wash/wipe is selected and three complete windscreen wipe cycles more, under the control of the VECU (9074) pin B16 and the interval relay (321).

Washer fluid level

A sensor in the washer fluid container grounds "BB1" pin 8 to light the washer level low warning lamp on the Bus Instrument Cluster when the washer fluid level is low. This signal is transmitted via Control Module 4 pin 18, the VOLCANO databus, the Central Electronic Control Module (CECM-C) and the J1587/1708 databus to the left-hand BIC unit (702LHS).

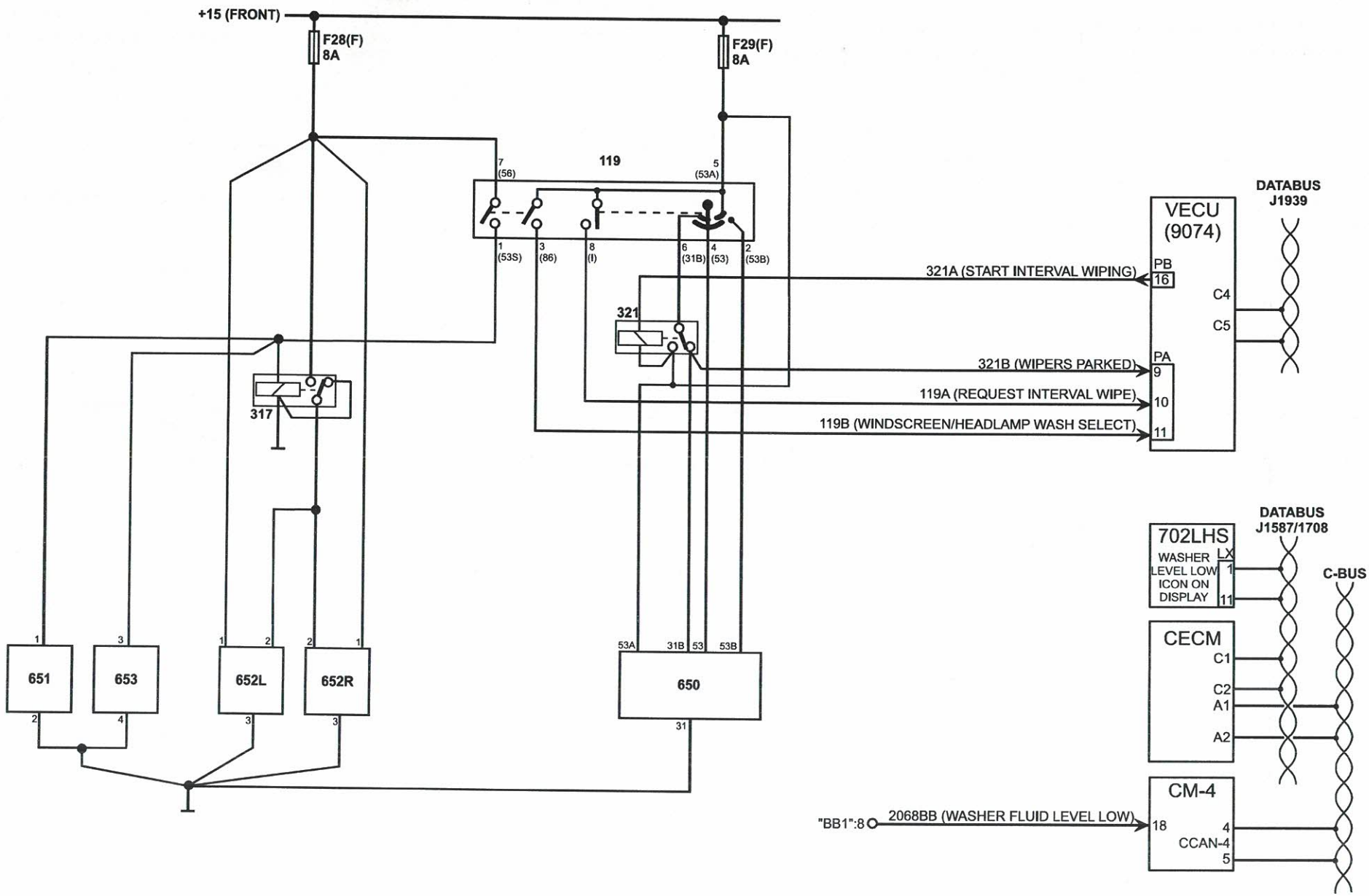
+15 (FRONT)
F28(F)
8A
F29(F)
8A
119
7
(56)
5
(53A)
1
(53S)
3
(86)
8
(I)
6
(31B)
4
(53)
2
(53B)
321
317
651
653
652L
652R
650
53A
31B
53
53B
31
VECU
(9074)
PB
16
PA
9
10
11
C4
C5
321A (START INTERVAL WIPING)
321B (WIPERS PARKED)
119A (REQUEST INTERVAL WIPE)
119B (WINDSCREEN/HEADLAMP WASH SELECT)
DATABUS
J1939
702LHS
WASHER
LEVEL LOW
ICON ON
DISPLAY
LX
1
11
DATABUS
J1587/1708
C-BUS
CECM
C1
C2
A1
A2
CM-4
18
4
CCAN-4
5
"BB1":8
2068BB (WASHER FLUID LEVEL LOW)

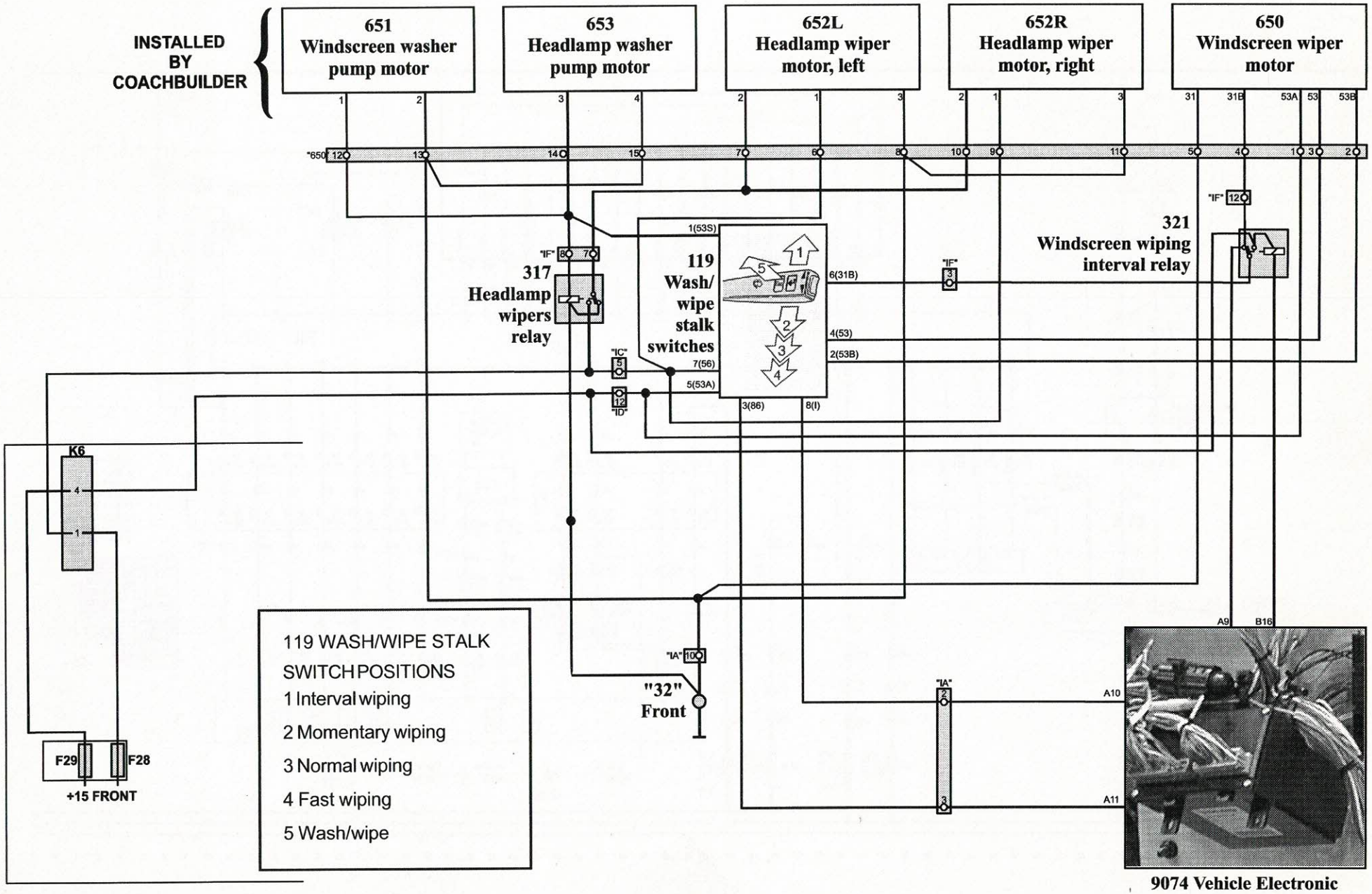

Fuse locations on front electrical centre printed circuit card

9074 Vehicle Electronic Control Unit (VECU)

HA ZF HP 502 automatic transmission and reversing lights

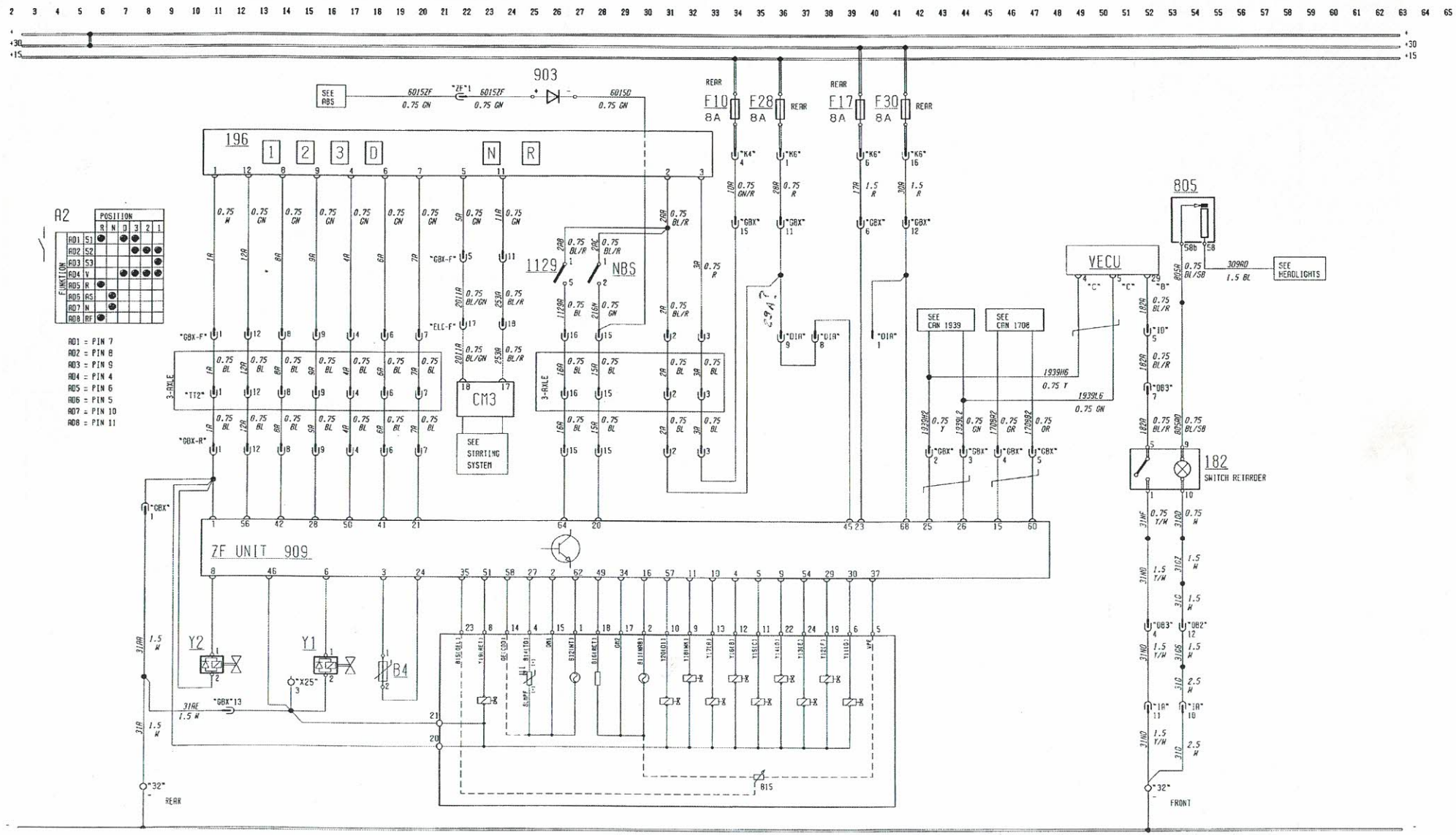

Fuses on rear electrical centre card

Fuse	Rating	Circuit protected by fuse
F10	8A	"+15" feed to (196)
F17	8A	"+30" feed to (909)
F28	8A	"+15" feed to (909)
F30	8A	"+30" feed to (909) and "DIA"

No.	Component
182	Retarder enable switch
196	ZF gear selector switches
805	Panel lamps dimmer rheostat
909	ZF automatic transmission control unit
1129	Alternative gearshift program switch
9074	Vehicle Electronic Control Unit
CM-3	Control Module 3
NBS	Neutral on Bus Stop switch

HA Circuit description

The control unit (909) contains its own computer program to translate the driver's gear selection from the buttons (196) into energising sequences for the solenoid valves that control the selection and engagement of gears in the transmission. An important input to the transmission software is the accelerator pedal position, received from the position sensor (7065) by the VECU (9074) at pin PB8 and transmitted via the 1939 databus to the control unit (909). When the parking brake has been engaged by the driver, the signal change at the VECU (9074) pin PB11 is transmitted via the 1939 databus to the transmission control unit (909), which orders the transmission to switch into neutral. Reverse and neutral gear selected signals are transmitted directly from the gear selector (196) to Control Module 3 pins 17 and 18 respectively, for onward transmission to the Central Electronic Control Module CECM-C via the C-bus. The reverse gear information is used by the turntable (refer to Schematic LA), and the neutral gear selection by the bus starting circuit (see Schematic EC). The current gear position, derived from the gear selector (196) signals to the control unit (909), is sent via the J1939 databus to the CECM-C for use in its software.

Transmission retarder

The transmission includes a built-in hydraulic retarder, activated from (909) pin 51 by a foot retarder signal from (807F) via pin PB27 of the VECU (9074) and the J1939 databus to the control unit (909). This also controls the retarder accumulator and proportional valves via (909) pins 8 and 6 respectively. Operating the retarder enable switch (182) lights its built-in retarder engaged lamp and grounds the VECU (9074) pin PB29. This signal is forwarded via the J1939 databus to the transmission control unit (909) and to the Bus Instrument Cluster to present the retarder engaged icon on its display.

The retarder oil temperature is constantly monitored by the temperature sensor B4 connected between (909) pins 3 and 24. If the temperature exceeds a predetermined level, a warning is activated on the Bus Instrument Cluster and the retarder temperature high icon is displayed to the driver. The standard default (909) program automatically reduces the retarder torque gradually in proportion to the degree of excess sump temperature.

Neutral on Bus Stop

The NBS feature, on some city buses, disengages certain clutches to reduce transmission friction *if*: the footbrake is applied, increasing footbrake pneumatic circuit pressure and closing the (NBS) switch to make (909) pin 20 go high *and* the bus is moving slower than 3 km/h, the accelerator is at idle *and* the transmission is in first gear. The transmission will revert to first gear if any of these functions is removed; normally the footbrake will be released first.

Alternative gearshift program

If the alternative gearshift program switch (1129) is closed to apply a high digital input to (909) pin 64, the control unit will change its software program. The default program provides best economy.

Body connection

When reverse gear has been selected, body connector "BB1" pin 12 goes high, driven from Control Module 4 pin 13, to light the reversing lights that have been installed by the coachbuilder via an external relay and separate fuses.

Diagnostics

Both the DIA-8 and DIA-16 connectors can transmit ZF transmission diagnostic information to external equipment as required, via the J1587/1708 databus (refer also to Schematic CD for the diagnostic and end-of-line connections).

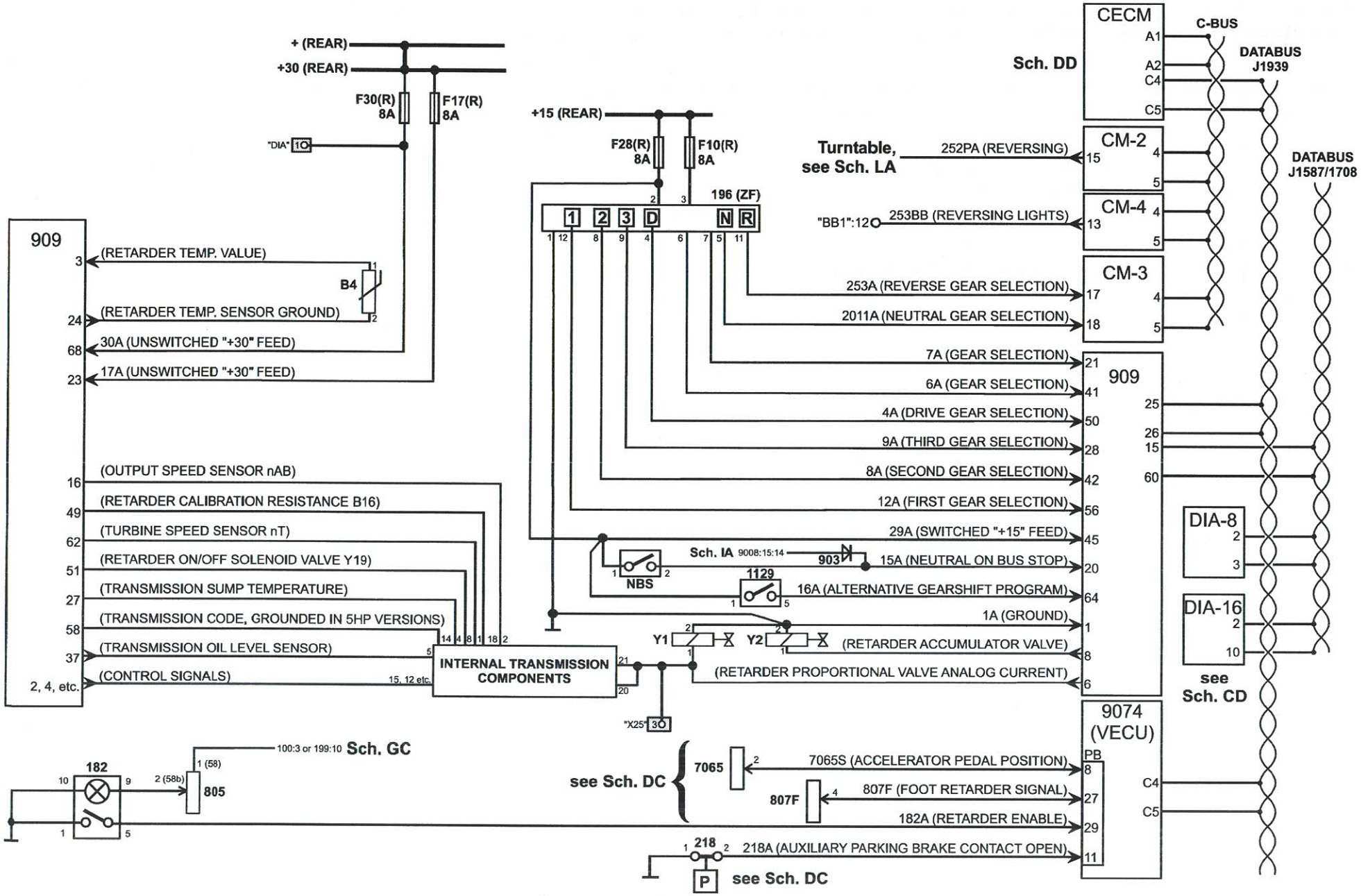
+ (REAR)
+30 (REAR)
F30(R) 8A
F17(R) 8A
"DIA" 1
+15 (REAR)
F28(R) 8A
F10(R) 8A
196 (ZF)
1 2 3 D N R
909
(RETARDER TEMP. VALUE)
B4
(RETARDER TEMP. SENSOR GROUND)
30A (UNSWITCHED "+30" FEED)
17A (UNSWITCHED "+30" FEED)
(OUTPUT SPEED SENSOR nAB)
(RETARDER CALIBRATION RESISTANCE B16)
(TURBINE SPEED SENSOR nT)
(RETARDER ON/OFF SOLENOID VALVE Y19)
(TRANSMISSION SUMP TEMPERATURE)
(TRANSMISSION CODE, GROUNDED IN 5HP VERSIONS)
(TRANSMISSION OIL LEVEL SENSOR)
(CONTROL SIGNALS)
INTERNAL TRANSMISSION COMPONENTS
Y1
Y2
"X25" 3
Sch. IA 9008:15:14
903
NBS
1129
(RETARDER ACCUMULATOR VALVE)
(RETARDER PROPORTIONAL VALVE ANALOG CURRENT)
Sch. DD
CECM
C-BUS
DATABUS J1939
DATABUS J1587/1708
Turntable, see Sch. LA
252PA (REVERSING)
CM-2
"BB1":12
253BB (REVERSING LIGHTS)
CM-4
CM-3
253A (REVERSE GEAR SELECTION)
2011A (NEUTRAL GEAR SELECTION)
7A (GEAR SELECTION)
6A (GEAR SELECTION)
4A (DRIVE GEAR SELECTION)
9A (THIRD GEAR SELECTION)
8A (SECOND GEAR SELECTION)
12A (FIRST GEAR SELECTION)
29A (SWITCHED "+15" FEED)
15A (NEUTRAL ON BUS STOP)
16A (ALTERNATIVE GEARSHIFT PROGRAM)
1A (GROUND)
DIA-8
DIA-16
see Sch. CD
9074 (VECU)
PB
7065S (ACCELERATOR PEDAL POSITION)
807F (FOOT RETARDER SIGNAL)
182A (RETARDER ENABLE)
218A (AUXILIARY PARKING BRAKE CONTACT OPEN)
see Sch. DC
7065
807F
218
P
see Sch. DC
182
805
100:3 or 199:10 Sch. GC

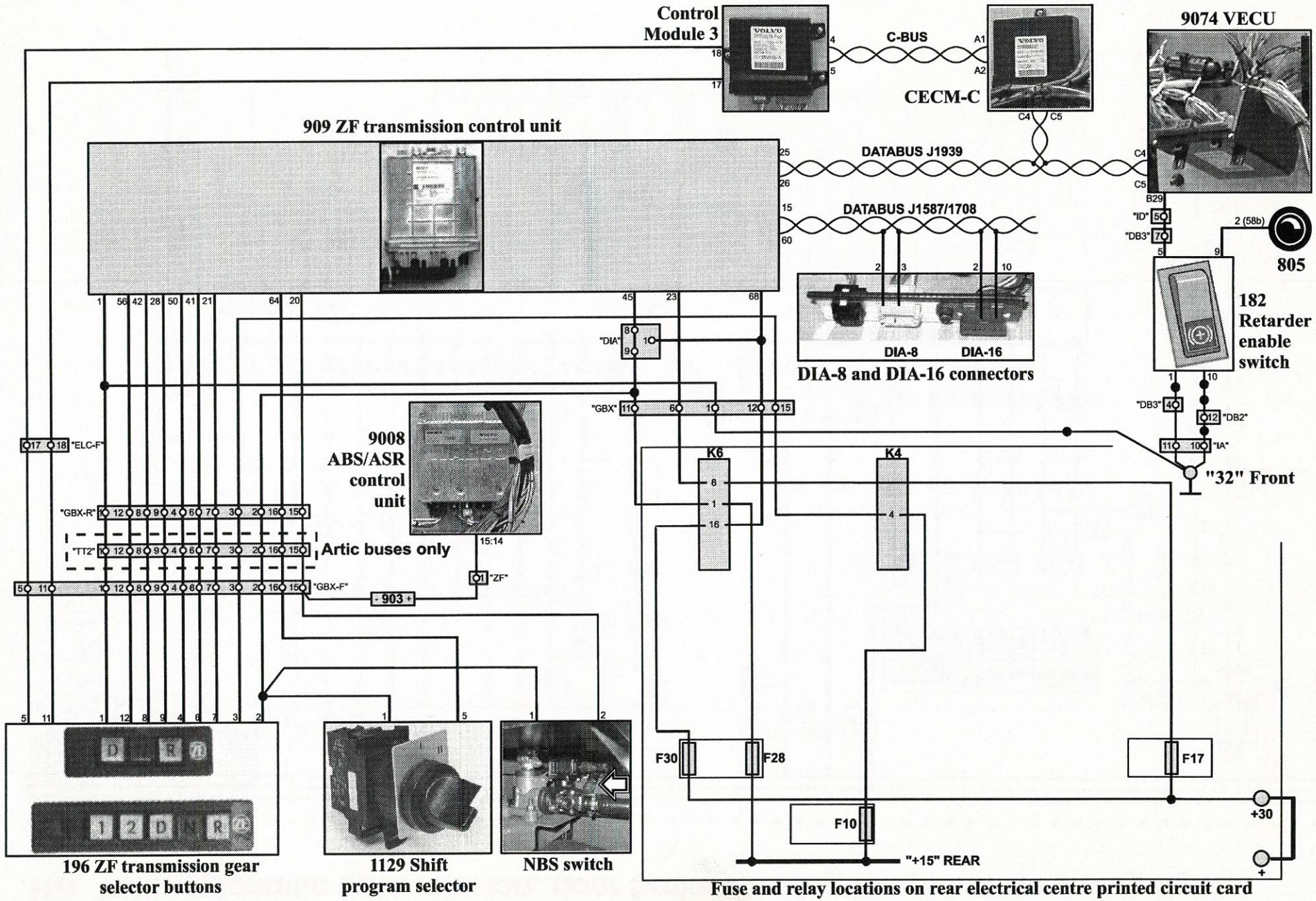
Control Module 3
C-BUS
CECM-C
9074 VECU
909 ZF transmission control unit
DATABUS J1939
DATABUS J1587/1708
DIA-8
DIA-16
DIA-8 and DIA-16 connectors
805
182 Retarder enable switch
"32" Front
9008 ABS/ASR control unit
Artic buses only
K6
K4
F30
F28
F17
F10
+30
"+15" REAR
196 ZF transmission gear selector buttons
1129 Shift program selector
NBS switch
Fuse and relay locations on rear electrical centre printed circuit card

HB Voith automatic transmission, door brake warning lamp and reversing lights

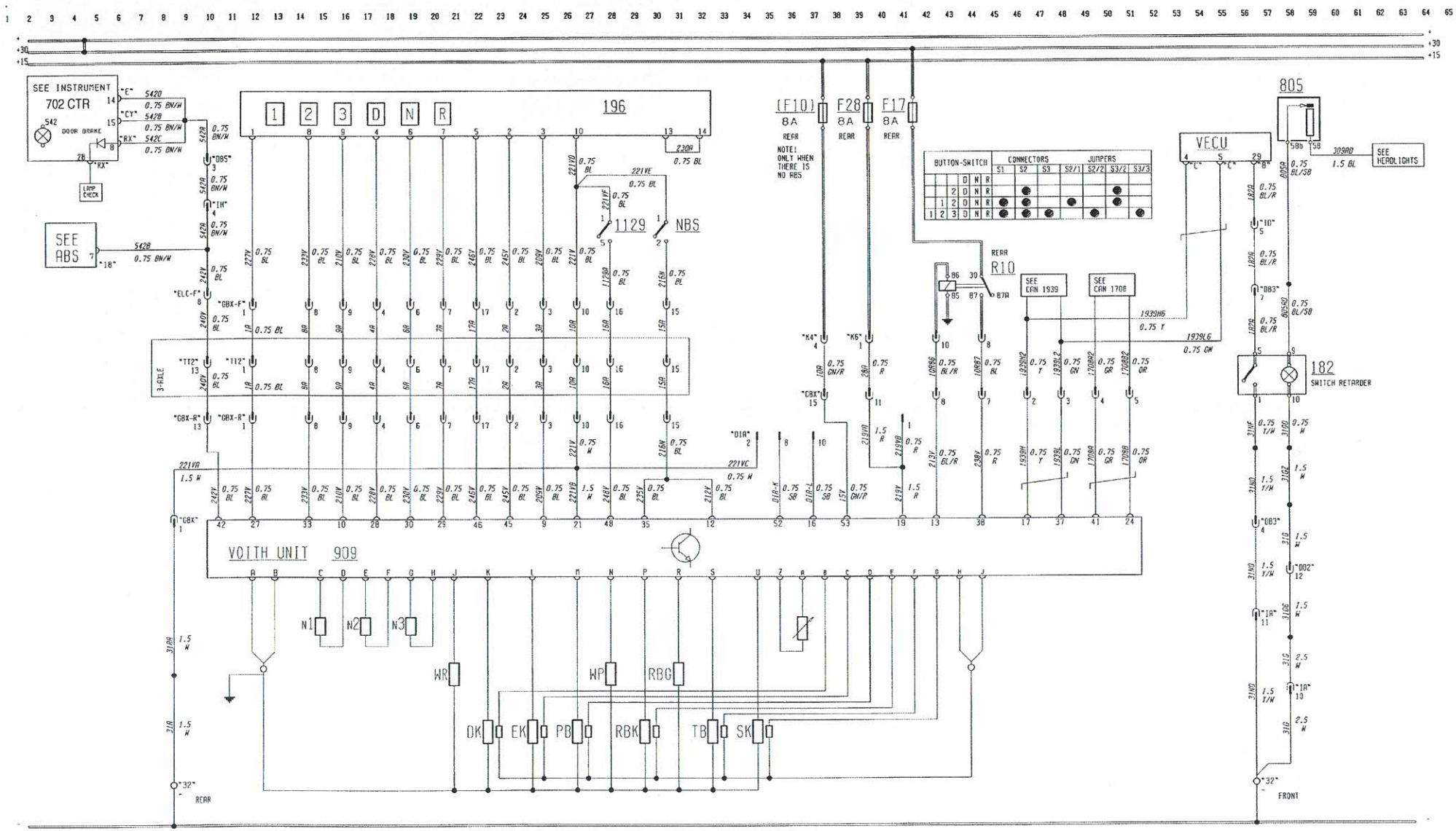

Fuses on rear electrical centre card

Fuse	Rating	Circuit protected by fuse
F10	8A	"+15" feed to (909) when no ABS system is installed
F17	8A	"+30" feed to (909) via RL10(R)
F28	8A	"+15" feed to (909)

Relay	Circuit
RL10	"+30" feed to Voith automatic transmission control unit (909)

No.	Component
182	Retarder enable switch
196	Voith gear selector switches
542	Door brake warning lamp
702CTR	Bus Instrument Cluster, Centre module
805	Panel lamps dimmer rheostat
909	Voith automatic transmission control unit
1129	Alternative gearshift program switch
9074	Vehicle Electronic Control Unit (VECU)
CM-3	Control Module 3
NBS	Neutral on Bus Stop switch

HB Circuit description

The Voith transmission control unit (909) contains its own computer program to translate the driver's gear selection from the buttons (196) into energising sequences for the solenoid valves (WR, DK, EK etc.) that control the selection and engagement of gears in the transmission. An important input to the transmission software is the accelerator pedal position, received from the position sensor (7065) by the VECU (9074) at pin PB8 and transmitted via the J1939 databus to the control unit (909).

The current gear position, derived from the gear selector (196) signals to the control unit (909), is sent via the J1939 databus to the CECM for use in its software. The reverse gear information is used by the turntable (refer to Schematic LA), and the neutral gear selection by the bus starting circuit (see Schematic EC).

Note that the "+15" supply from fuse F10 (rear) to pin 53 of the control unit (909) is only required for buses that have Voith automatic transmissions but are *not* equipped with ABS.

Transmission retarder

The transmission includes a built-in hydraulic retarder, activated by a foot retarder signal from (807F) via pin PB27 of the VECU (9074) and the J1939 databus to the control unit (909). This controls the appropriate retarder valves. Operating the retarder enable switch (182) lights its built-in retarder engaged lamp and grounds the VECU (9074) pin PB29. This signal is forwarded via the J1939 databus to the transmission control unit (909) and to the Bus Instrument Cluster to present the "retarder engaged" icon on its display.

The retarder oil temperature is constantly monitored by a built-in temperature sensor. If the temperature exceeds a predetermined level, a warning is activated on the Bus Instrument Cluster and the retarder temperature high icon is displayed to the driver, who must change to a lower gear to reduce the power being dissipated by the retarder.

Neutral on Bus Stop

City buses may be equipped with NBS. This disengages certain clutches to reduce transmission friction *if*: the footbrake is applied, increasing pressure in the footbrake pneumatic circuit and closing the (NBS) switch to make (909) pins 12 and 35 go high *and* the bus is moving slower than 3 km/h, the accelerator is at idle *and* the transmission is in first gear. The transmission will revert to first gear if any of these functions is removed; normally the footbrake will be released first.

Alternative gearshift program

If the alternative gearshift program switch (1129) is closed to apply ground to (909) pin 48, the control unit will change its software program to use an alternative gear shifting program. The default program provides best economy.

Body connection

When reverse gear has been selected, body connector "BB1" pin 12 goes high, driven from Control Module 4 pin 13, to light the reversing lights that have been installed by the coachbuilder via an external relay and separate fuses.

Diagnostics

Both the DIA-8 and DIA-16 connectors can transmit Voith transmission diagnostic information to external equipment as required, via the J1587/1708 databus (refer also to Schematic CD for the diagnostic and end-of-line connections).

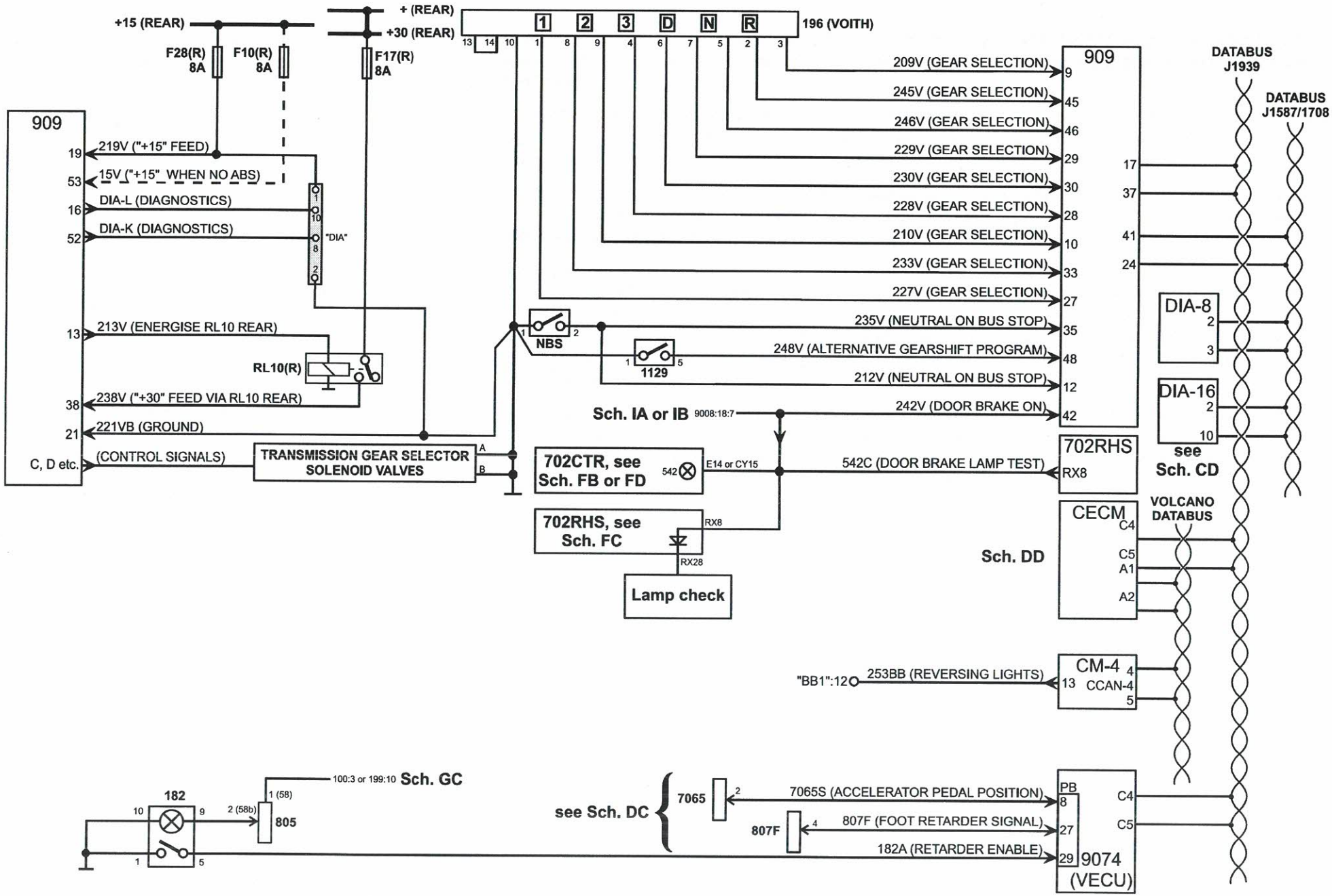
+15 (REAR)
+ (REAR)
+30 (REAR)
F28(R) 8A
F10(R) 8A
F17(R) 8A
196 (VOITH)
1 2 3 D N R
909
19 219V ("+15" FEED)
53 15V ("+15" WHEN NO ABS)
16 DIA-L (DIAGNOSTICS)
52 DIA-K (DIAGNOSTICS)
"DIA"
13 213V (ENERGISE RL10 REAR)
RL10(R)
38 238V ("+30" FEED VIA RL10 REAR)
21 221VB (GROUND)
C, D etc. (CONTROL SIGNALS)
TRANSMISSION GEAR SELECTOR SOLENOID VALVES
NBS
1129
209V (GEAR SELECTION)
245V (GEAR SELECTION)
246V (GEAR SELECTION)
229V (GEAR SELECTION)
230V (GEAR SELECTION)
228V (GEAR SELECTION)
210V (GEAR SELECTION)
233V (GEAR SELECTION)
227V (GEAR SELECTION)
235V (NEUTRAL ON BUS STOP)
248V (ALTERNATIVE GEARSHIFT PROGRAM)
212V (NEUTRAL ON BUS STOP)
242V (DOOR BRAKE ON)
Sch. IA or IB 9008:18:7
702CTR, see Sch. FB or FD
542
E14 or CY15
542C (DOOR BRAKE LAMP TEST)
702RHS, see Sch. FC
RX8
RX28
Lamp check
702RHS
RX8
DATABUS J1939
DATABUS J1587/1708
DIA-8
DIA-16
see Sch. CD
VOLCANO DATABUS
CECM
Sch. DD
C4 C5 A1 A2
CM-4
CCAN-4
"BB1":12
253BB (REVERSING LIGHTS)
182
805
100:3 or 199:10 Sch. GC
see Sch. DC
7065
807F
7065S (ACCELERATOR PEDAL POSITION)
807F (FOOT RETARDER SIGNAL)
182A (RETARDER ENABLE)
PB
9074 (VECU)

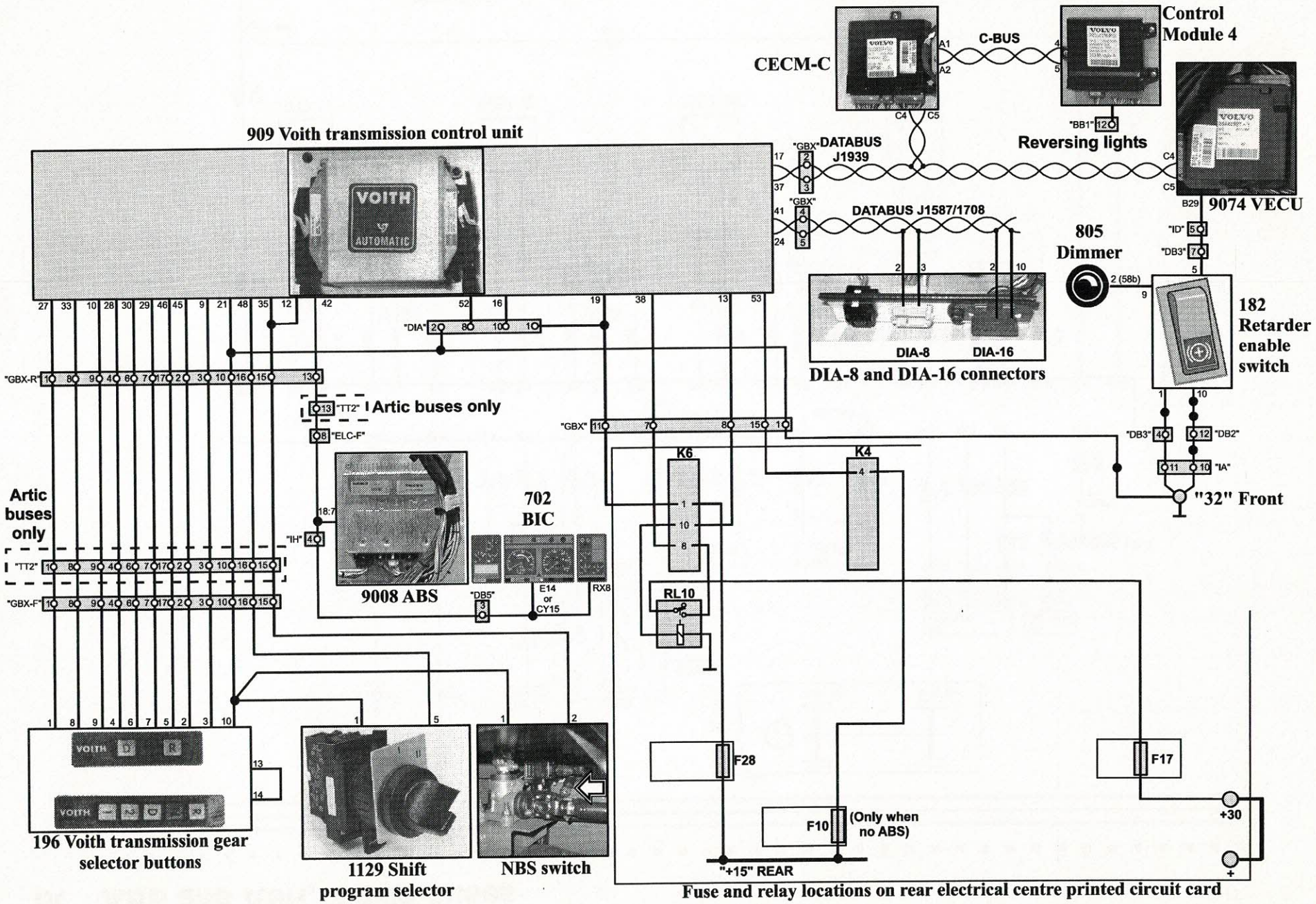

Fuse and relay locations on rear electrical centre printed circuit card

IA ABS and ASR, 2-axle buses

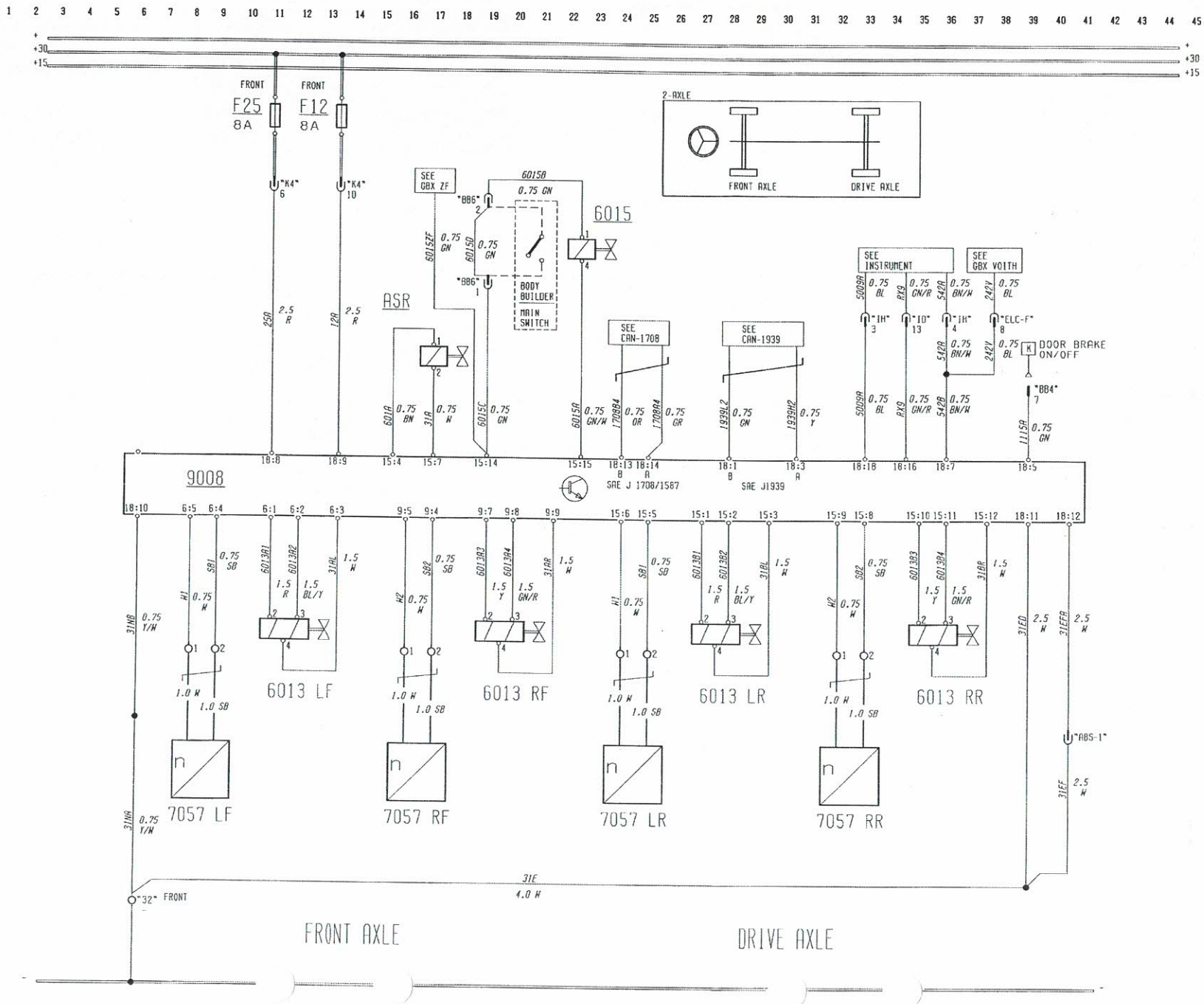

Fuses on front electrical centre card

Fuse	Rating	Circuit protected by fuse
F12	8A	"+30" feed to ABS/ASR control unit (9008)
F25	8A	"+30" feed to ABS/ASR control unit (9008)

No.	Component
6013	Wheel brake ABS solenoid valves
6015	Door brake solenoid valve
7057	Road wheel rotation ABS sender
9008	ABS/ASR control unit
ASR	Anti-slip solenoid valve (option)

IA Circuit descriptions

Anti-Blocking System (ABS)

The ABS system is fully automatic, i.e. it does not require any input from the driver. ABS prevents wheels locking during braking by momentarily releasing and then re-applying the brakes, by means of solenoid valves (6013), one for each wheel.

Pin 18:18 of the ABS control unit (9008) will be grounded if the control unit is not plugged in, or is not functional. This low digital input to the Bus Instrument Cluster (702CTR) at pin E15 or CY17 will light the ABS warning lamp (5009) on the instrument panel. Note that if the bus is not intended to have ABS, pin 18:18 in the wiring loom must be isolated from (702CTR) pin E15 or CY17, or some other provision made to prevent this warning lamp from lighting.

Anti-Slip Regulation (ASR)

ASR operation is also automatic; if one drive wheel begins to turn faster than the other, indicating slipping, solenoid valve (ASR) will be energised by outputs from the control unit (9008) pins 15:4 and 15:7, and brake both drive wheels by allowing compressed air through to the ABS solenoid valves (6013). This slows or momentarily stops the drive wheels, which are then released to start turning again. If one or both wheels again begins to slip, the ASR solenoid valves are again activated via the ASR valve to brake them. This continues and is repeated as often as necessary.

Door brake

Note: This version of the door brake function applies to B7L and B7TL buses with chassis number up to and including chassis no. 1194.

If any door is open or the bus is kneeling, the door brake function keeps the brakes applied, to ensure that the bus cannot move while passengers are entering or exiting.

The ABS/ASR control unit (9008) is also used to receive the "activate door brake" signal from the body via "BB4" pin 7 when any door is opened or the bus begins to kneel. This energises the door brake solenoid valve (6015) to apply the parking brake. In buses with a Voith or ZF automatic transmission, the Neutral on Bus Stop (NBS) condition is set. Also, the VECU (9074) sets the engine to low idle. Control unit (9008) reports that the door brake function is activated via pin 18:7 to light the door brake lamp in the BIC (702CTR) via pin E14 or CY15 (see Schematic NB or ND as appropriate).

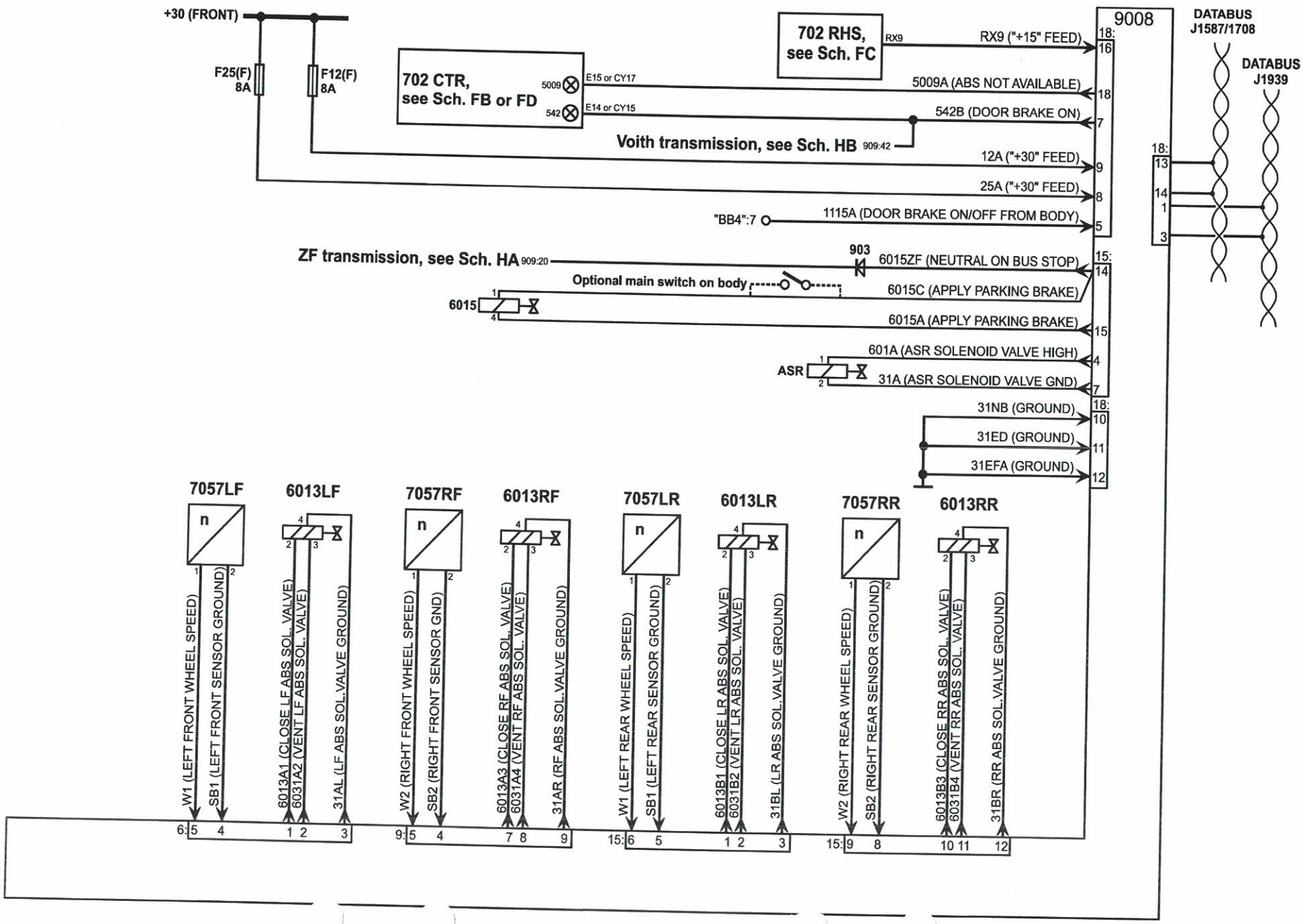
+30 (FRONT)
F25(F) 8A
F12(F) 8A
702 CTR, see Sch. FB or FD
5009
542
E15 or CY17
E14 or CY15
702 RHS, see Sch. FC
RX9
RX9 ("+15" FEED)
5009A (ABS NOT AVAILABLE)
542B (DOOR BRAKE ON)
Voith transmission, see Sch. HB 909:42
12A ("+30" FEED)
25A ("+30" FEED)
"BB4":7
1115A (DOOR BRAKE ON/OFF FROM BODY)
ZF transmission, see Sch. HA 909:20
903
6015ZF (NEUTRAL ON BUS STOP)
Optional main switch on body
6015C (APPLY PARKING BRAKE)
6015
6015A (APPLY PARKING BRAKE)
601A (ASR SOLENOID VALVE HIGH)
ASR
31A (ASR SOLENOID VALVE GND)
31NB (GROUND)
31ED (GROUND)
31EFA (GROUND)
9008
DATABUS J1587/1708
DATABUS J1939
7057LF
6013LF
7057RF
6013RF
7057LR
6013LR
7057RR
6013RR
W1 (LEFT FRONT WHEEL SPEED)
SB1 (LEFT FRONT SENSOR GROUND)
6013A1 (CLOSE LF ABS SOL. VALVE)
6031A2 (VENT LF ABS SOL. VALVE)
31AL (LF ABS SOL.VALVE GROUND)
W2 (RIGHT FRONT WHEEL SPEED)
SB2 (RIGHT FRONT SENSOR GND)
6013A3 (CLOSE RF ABS SOL. VALVE)
6031A4 (VENT RF ABS SOL. VALVE)
31AR (RF ABS SOL.VALVE GROUND)
W1 (LEFT REAR WHEEL SPEED)
SB1 (LEFT REAR SENSOR GROUND)
6013B1 (CLOSE LR ABS SOL. VALVE)
6031B2 (VENT LR ABS SOL. VALVE)
31BL (LR ABS SOL.VALVE GROUND)
W2 (RIGHT REAR WHEEL SPEED)
SB2 (RIGHT REAR SENSOR GROUND)
6013B3 (CLOSE RR ABS SOL. VALVE)
6031B4 (VENT RR ABS SOL. VALVE)
31BR (RR ABS SOL.VALVE GROUND)

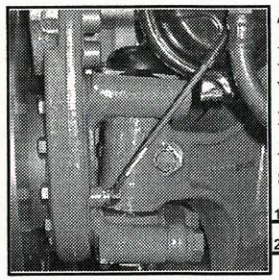

7057LF
Road
wheel
rotation
ABS
sender

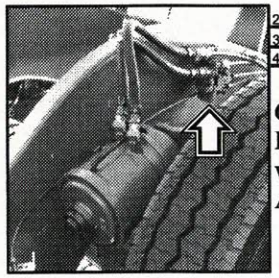

6013RR
Right rear
wheel brake
ABS solenoid valve

ASR solenoid valve

6015 Doors solenoid valve

702
Bus
Instrument
Cluster

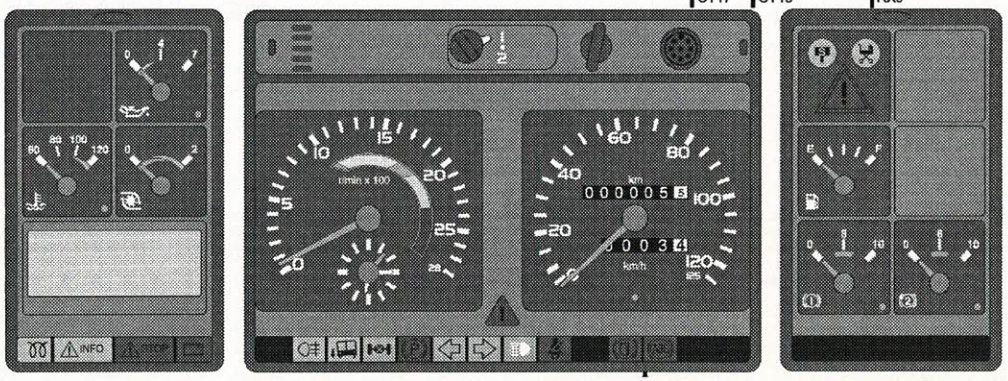

Fuse locations on front electrical centre printed circuit card

IB ABS and ASR, articulated buses

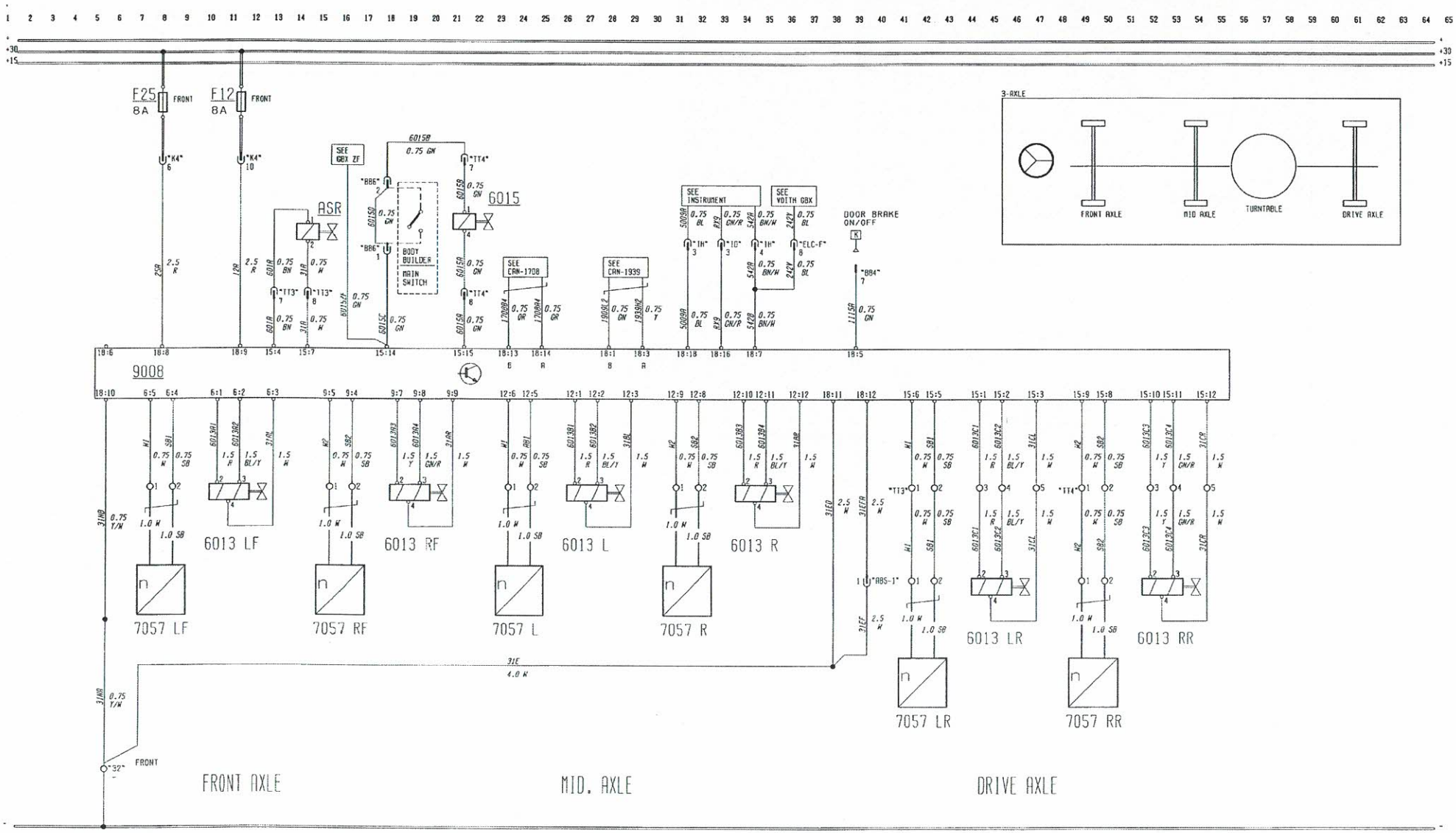

Fuses on front electrical centre card

Fuse	Rating	Circuit protected by fuse
F12	8A	"+30" feed to ABS/ASR control unit (9008)
F25	8A	"+30" feed to ABS/ASR control unit (9008)

No.	Component
6013	Wheel brake ABS solenoid valves
6015	Door brake solenoid valve
7057	Road wheel rotation ABS sender
9008	ABS/ASR control unit
ASR	Anti-slip solenoid valve (option)

IB Circuit descriptions

Anti-Blocking System (ABS)

The ABS system is fully automatic, i.e. it does not require any input from the driver. ABS prevents wheels locking during braking by momentarily releasing and then re-applying the brakes, by means of solenoid valves (6013), one for each wheel.

Pin 18:18 of the ABS control unit (9008) will be grounded if the control unit is not plugged in, or is not functional. This low digital input to the Bus Instrument Cluster (702CTR) at pin E15 or CY17 will light the ABS warning lamp (5009) on the instrument panel. Note that if the bus is not intended to have ABS, pin 18:18 in the wiring loom must be isolated from (702CTR) pin E15 or CY17, or some other provision made to prevent this warning lamp from lighting.

Anti-Slip Regulation (ASR)

ASR operation is also automatic; if one drive wheel begins to turn faster than the other, indicating slipping, solenoid valve (ASR) will be energised by outputs from the control unit (9008) pins 15:4 and 15:7, and brake both drive wheels by allowing compressed air through to the ABS solenoid valves (6013). This slows or momentarily stops the drive wheels, which are then released to start turning again. If one or both wheels again begins to slip, the ASR solenoid valves are again activated via the ASR valve to brake them. This continues and is repeated as often as necessary.

Door brake

Note: This version of the door brake function applies to B7L and B7TL buses with chassis number up to and including chassis no. 1194.

If any door is open or the bus is kneeling, the door brake function keeps the brakes applied, to ensure that the bus cannot move while passengers are entering or exiting.

The ABS/ASR control unit (9008) is also used to receive the "activate door brake" signal from the body via "BB4" pin 7 when any door is opened or the bus begins to kneel. This energises the door brake solenoid valve (6015) to apply the parking brake. In buses with a Voith or ZF automatic transmission, the Neutral on Bus Stop (NBS) condition is set. Also, the VECU (9074) sets the engine to low idle. Control unit (9008) reports that the door brake function is activated via pin 18:7 to light the door brake lamp in the BIC (702CTR) via pin E14 or CY15 (see Schematic NB or ND as appropriate).

A door brake main switch may be included in the door brake solenoid valve (6015) circuit by the coachbuilder. When this is switched off, the door brake function described above is inhibited.

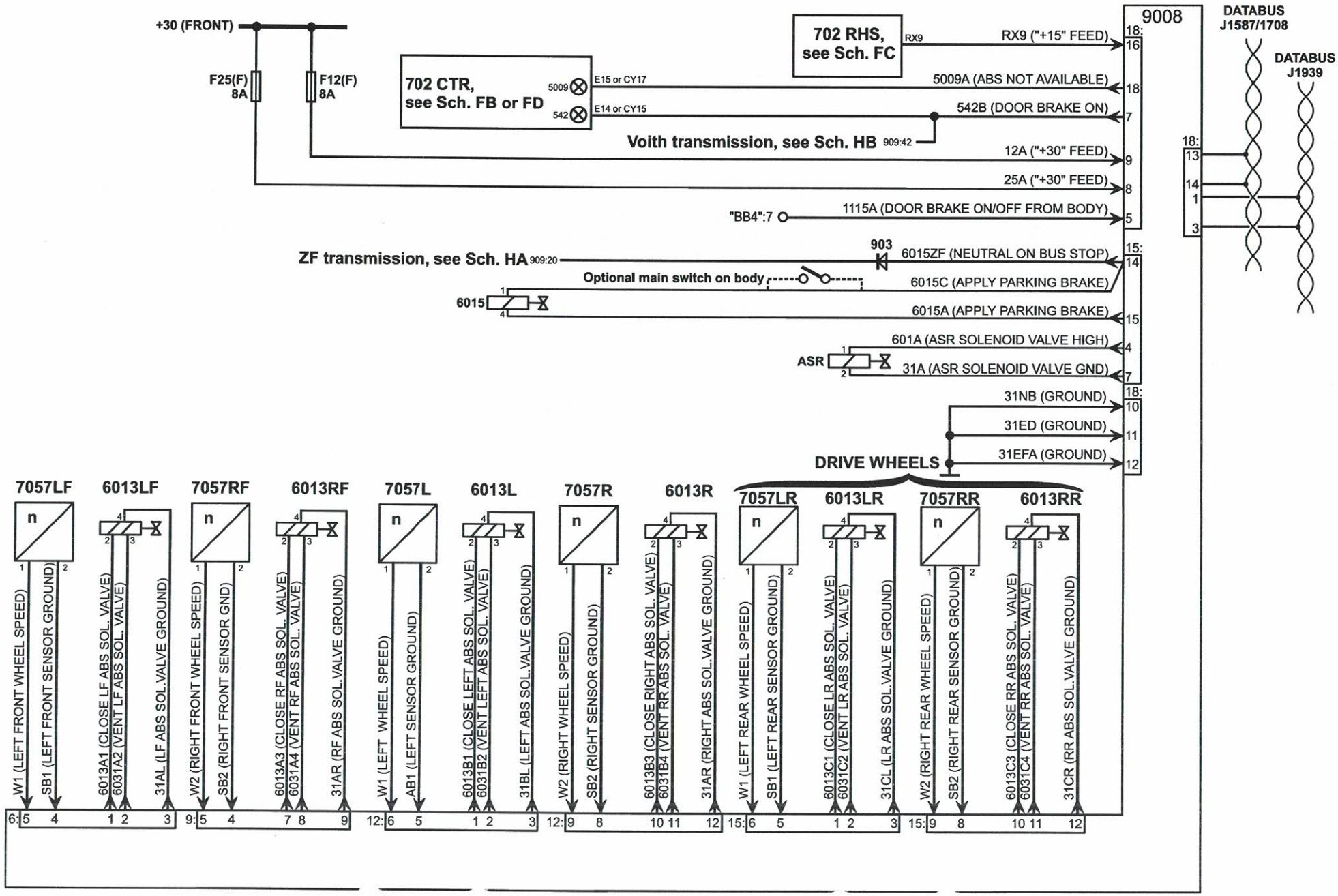
+30 (FRONT)
F25(F) 8A
F12(F) 8A
702 CTR, see Sch. FB or FD
5009
542
E15 or CY17
E14 or CY15
702 RHS, see Sch. FC
RX9
RX9 ("+15" FEED)
5009A (ABS NOT AVAILABLE)
542B (DOOR BRAKE ON)
Voith transmission, see Sch. HB 909:42
12A ("+30" FEED)
25A ("+30" FEED)
"BB4":7
1115A (DOOR BRAKE ON/OFF FROM BODY)
ZF transmission, see Sch. HA 909:20
903
6015ZF (NEUTRAL ON BUS STOP)
Optional main switch on body
6015C (APPLY PARKING BRAKE)
6015
6015A (APPLY PARKING BRAKE)
601A (ASR SOLENOID VALVE HIGH)
ASR
31A (ASR SOLENOID VALVE GND)
31NB (GROUND)
31ED (GROUND)
31EFA (GROUND)
DRIVE WHEELS
9008
DATABUS J1587/1708
DATABUS J1939
7057LF
6013LF
7057RF
6013RF
7057L
6013L
7057R
6013R
7057LR
6013LR
7057RR
6013RR
W1 (LEFT FRONT WHEEL SPEED)
SB1 (LEFT FRONT SENSOR GROUND)
6013A1 (CLOSE LF ABS SOL. VALVE)
6031A2 (VENT LF ABS SOL. VALVE)
31AL (LF ABS SOL.VALVE GROUND)
W2 (RIGHT FRONT WHEEL SPEED)
SB2 (RIGHT FRONT SENSOR GND)
6013A3 (CLOSE RF ABS SOL. VALVE)
6031A4 (VENT RF ABS SOL. VALVE)
31AR (RF ABS SOL.VALVE GROUND)
W1 (LEFT WHEEL SPEED)
AB1 (LEFT SENSOR GROUND)
6013B1 (CLOSE LEFT ABS SOL. VALVE)
6031B2 (VENT LEFT ABS SOL. VALVE)
31BL (LEFT ABS SOL.VALVE GROUND)
W2 (RIGHT WHEEL SPEED)
SB2 (RIGHT SENSOR GROUND)
6013B3 (CLOSE RIGHT ABS SOL. VALVE)
6031B4 (VENT RR ABS SOL. VALVE)
31AR (RIGHT ABS SOL.VALVE GROUND)
W1 (LEFT REAR WHEEL SPEED)
SB1 (LEFT REAR SENSOR GROUND)
6013C1 (CLOSE LR ABS SOL. VALVE)
6031C2 (VENT LR ABS SOL. VALVE)
31CL (LR ABS SOL.VALVE GROUND)
W2 (RIGHT REAR WHEEL SPEED)
SB2 (RIGHT REAR SENSOR GROUND)
6013C3 (CLOSE RR ABS SOL. VALVE)
6031C4 (VENT RR ABS SOL. VALVE)
31CR (RR ABS SOL.VALVE GROUND)

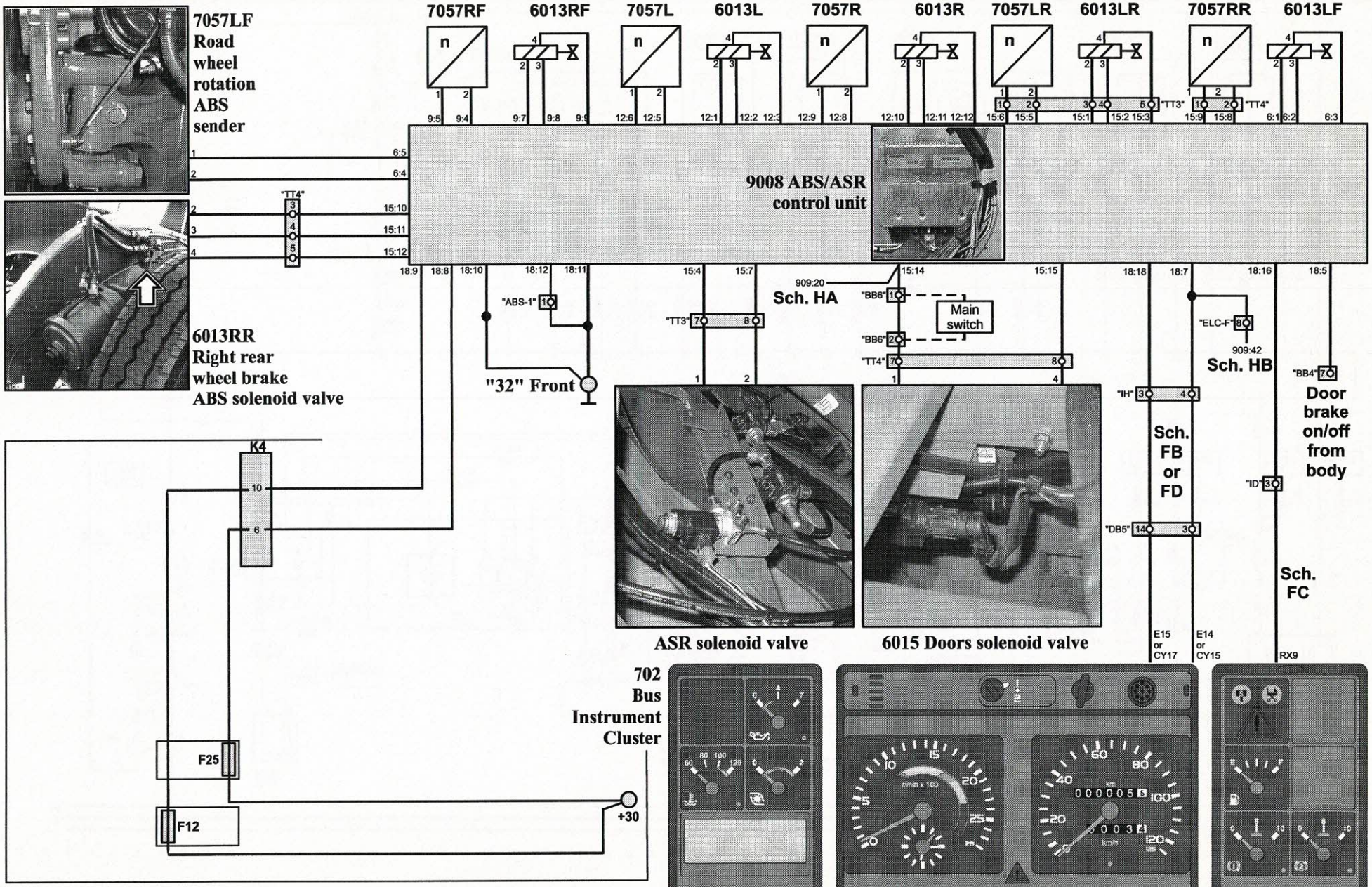

Fuse locations on front electrical centre printed circuit card

JA Electronically-controlled suspension (ECS), 2-axle buses

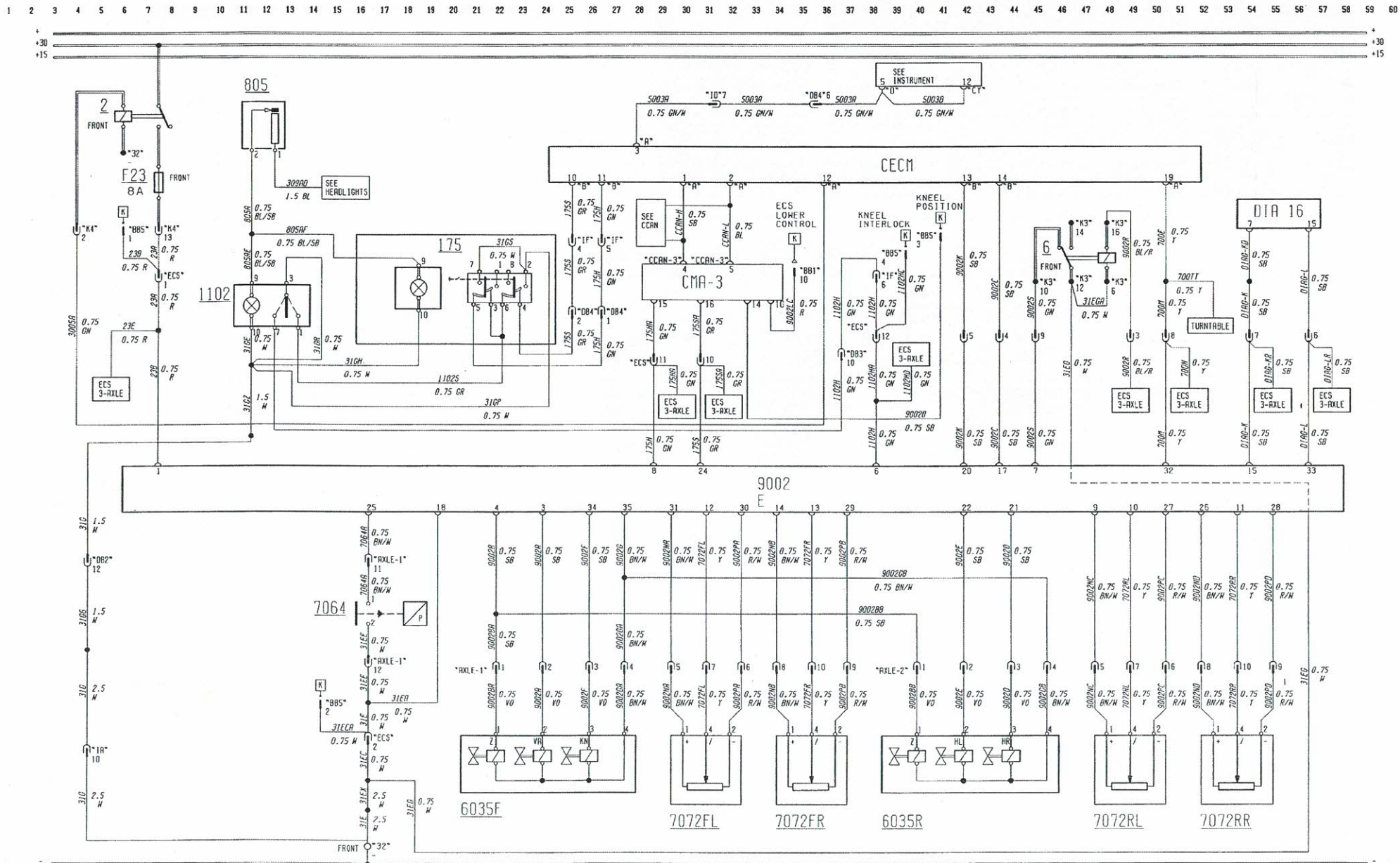

Fuse and relays on front electrical centre card

Fuse	Rating	Circuit protected by fuse
F23	8A	"+30" feed to (9002) and "BB5":1

Relay	Circuit
RL2	"+30" feed to (9002) and "BB5":1
RL6	Articulated bus configuration

No.	Component
175	Raise/lower switch
702CTR	Bus Instrument Cluster, Centre module
1102	Kneeling switch
6035F	ECS front solenoid valve block
6035R	ECS rear solenoid valve block
7064	ECS air suspension pressure low contact
7072	ECS height senders
9002	ECS control unit
CECM	Central Electronic Control Module
CM-3	Control Module 3
DIA-16	16-pole diagnostic connector

JA Circuit description

The Electronically-Controlled Suspension system (ECS) will only operate if there is sufficient pressure in the air suspension system (more than 7.5 bar) to close the pressure contact (7064) and thereby ground pin 25 of the ECS control unit (9002). If this pin is not grounded, the warning signal is sent via (9002) pin 17 to the Central Electronic Control Module (CECM-C) pin B14 as part of the ECS data, and used to display the ECS fault warning lamp on the Bus Instrument Cluster left side display (702LHS) and light the INFO warning lamp.

The "+30" feed to the ECS system from F23 (front) will only become available when the ECS enable signal has been received from the CECM-C to energise relay RL2 in the front electrical centre. This signal is sent once the bus engine has started and the alternator is delivering current to the batteries.

Normal driving

The four senders (7072) inform the ECS control unit (9002) of the chassis height, and their inputs are compared by the control unit program against stored values, to determine whether any corner of the chassis needs to be raised or lowered to keep the chassis level and at the correct ride height. If necessary, signals are sent from the control unit (9002) to the front and/or rear solenoid valve blocks (6035) to admit or exhaust air from the suspension air bellows, to keep a constant ride height.

Ferry lift (raising the bus)

The bus can only be raised if the engine is running and there is sufficient air pressure in the ECS system to permit raising. Note that the raise system (which is normally used when there are no passengers on board, to negotiate ferry ramps etc.) will operate with the passenger doors open or closed, and the bus can be driven without speed restrictions when in the raised position. However, the ECS diagnostics lamp on the instrument panel will begin to flash if the speed exceeds 30 km/h (the road speed signal, derived from the CECM-C pin A19, enters the control unit (9002) at pin 32).

When the upper part of the raise/lower switch (175) is pressed to ground (175) pin 5, it also grounds pin 8 of the ECS control unit (9002) via the CECM-C and CM-3 pin 15. This sends the appropriate signals to the solenoid valve blocks (6035) to open the valves and allow more air into the suspension bellows, raising the bus above its normal ride height. Signals from the chassis height senders (7072) inform the control unit when the pre-programmed ferry lift height (usually 8 cm above normal ride height) has been reached, and the solenoid valves then close to prevent further raising. At any time during raising, or after the pre-programmed raise height has been reached, the raise/lower switch (175) can be set back to its normal central position. This opens the control unit (9002) pin 8 ground connection, and the control unit then signals the solenoid valve blocks (6035) to exhaust air from the suspension bellows until normal ride height has been regained.

Kneeling

The kneeling switch (1102) permits either the front corner or the whole side (depending on the bus specification) to be lowered to a pre-programmed height (usually 8 cm) for passenger entry and exit. This height may be reprogrammed according to local requirements and the final step height after coachbuilding. When the lower part of the kneeling switch (1102) is pressed, pins 8 and 24 on (9002) are grounded via the CECM-C and CM-3 pins 15 and 16. Depending on whether the whole side or the front corner are programmed to kneel, signals are sent to the front (6035F) or to both solenoid valve blocks. The appropriate bellows are deflated by exhausting air through the solenoid valves to begin kneeling. As the bus lowering passes 80% of the full kneel, (9002) pin 20 goes high to signal kneeling position to the bus electronic systems via CECM-C pin B13, and to the body from CM-3 pin 14 via "BB5" pin 3 (see "Body connections" below). When the (9002) program receives signals from (7072) that match the preprogrammed kneeling height, the solenoid valves close to stop bellows deflation. Pressing the upper part of (1102) grounds (9002) pin 6 to initiate signals to open the valves in the blocks (6035) and permit air to inflate the bellows until normal ride height is regained, as reported by (7072). Once begun, this process cannot be stopped by the driver.

Body connections

"BB5" pin 1, connected to the ECS feed supply at F23 (front), can provide external circuits with up to a maximum of 1 ampere of power, controlled by the ECS enable signal. The associated ground connection is made via "BB5" pin 2. When the bus is at kneeling height, a +24V power feed output up to a maximum of 1 ampere is made available at "BB5" pin 3. An external low digital input (ground signal) from a switch or switches on the body can be applied to "BB5" pin 4 to initiate kneeling up, returning the bus from the kneeled to the normal height. This may for example be a signal activated when the doors are closed, to automatically raise the bus to the normal height.

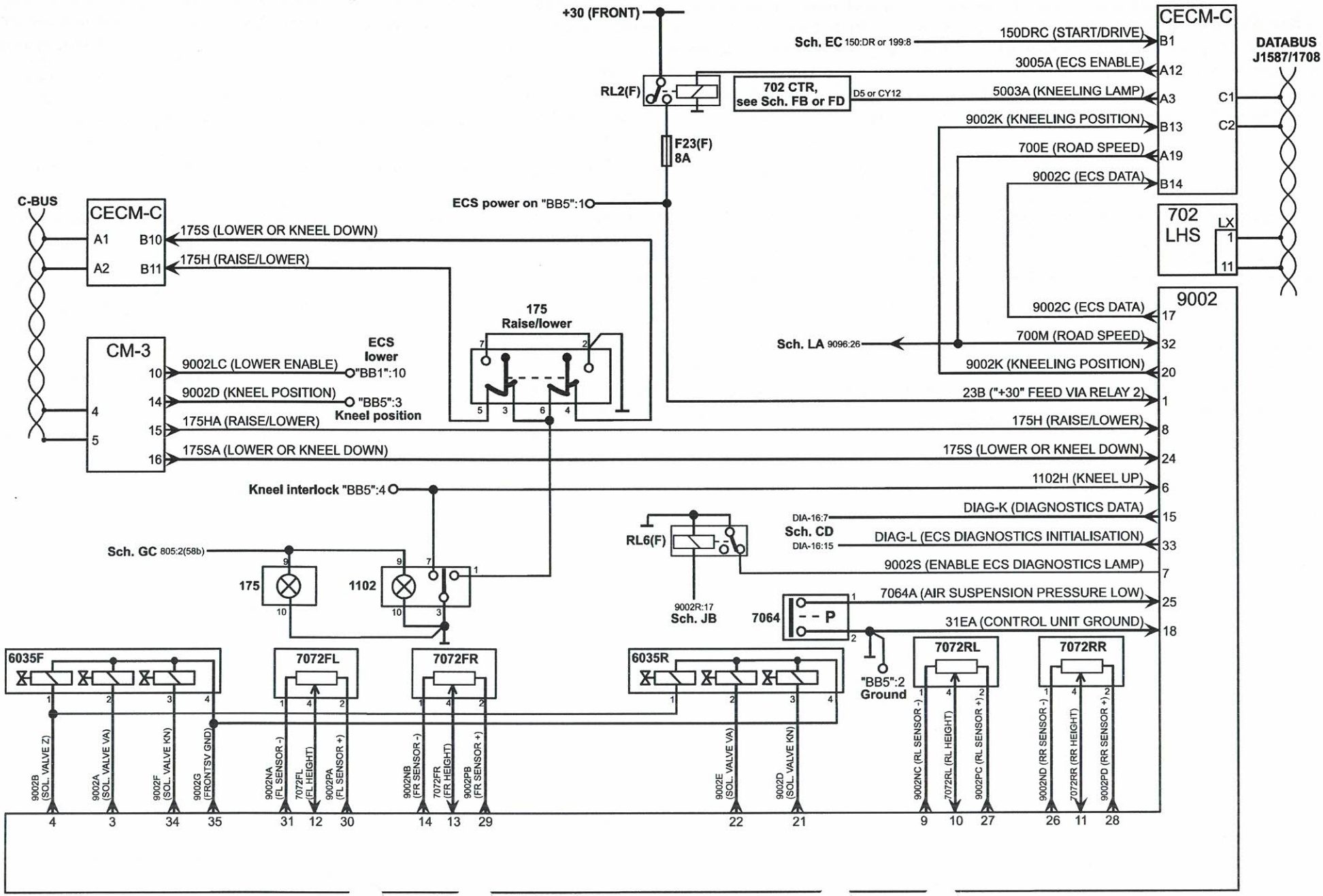
+30 (FRONT)
RL2(F)
F23(F)
8A
ECS power on "BB5":1
Sch. EC 150:DR or 199:8
150DRC (START/DRIVE)
3005A (ECS ENABLE)
702 CTR, see Sch. FB or FD
D5 or CY12
5003A (KNEELING LAMP)
9002K (KNEELING POSITION)
700E (ROAD SPEED)
9002C (ECS DATA)
CECM-C
B1
A12
A3
B13
A19
B14
C1
C2
DATABUS J1587/1708
702 LHS
LX
1
11
9002
C-BUS
CECM-C
A1
A2
B10
B11
175S (LOWER OR KNEEL DOWN)
175H (RAISE/LOWER)
175 Raise/lower
CM-3
9002LC (LOWER ENABLE)
ECS lower "BB1":10
9002D (KNEEL POSITION)
"BB5":3 Kneel position
175HA (RAISE/LOWER)
175SA (LOWER OR KNEEL DOWN)
Sch. LA 9096:26
9002C (ECS DATA)
700M (ROAD SPEED)
9002K (KNEELING POSITION)
23B ("+30" FEED VIA RELAY 2)
175H (RAISE/LOWER)
175S (LOWER OR KNEEL DOWN)
1102H (KNEEL UP)
Kneel interlock "BB5":4
DIAG-K (DIAGNOSTICS DATA)
DIA-16:7
Sch. CD
DIA-16:15
DIAG-L (ECS DIAGNOSTICS INITIALISATION)
9002S (ENABLE ECS DIAGNOSTICS LAMP)
7064A (AIR SUSPENSION PRESSURE LOW)
31EA (CONTROL UNIT GROUND)
RL6(F)
9002R:17
Sch. JB
7064
P
"BB5":2 Ground
Sch. GC 805:2(58b)
175
1102
6035F
7072FL
7072FR
6035R
7072RL
7072RR
9002B (SOL. VALVE Z)
9002A (SOL. VALVE VA)
9002F (SOL. VALVE KN)
9002G (FRONTSV GND)
9002NA (FL SENSOR -)
7072FL (FL HEIGHT)
9002PA (FL SENSOR +)
9002NB (FR SENSOR -)
7072FR (FR HEIGHT)
9002PB (FR SENSOR +)
9002E (SOL. VALVE VA)
9002D (SOL. VALVE KN)
9002NC (RL SENSOR -)
7072RL (RL HEIGHT)
9002PC (RL SENSOR +)
9002ND (RR SENSOR -)
7072RR (RR HEIGHT)
9002PD (RR SENSOR +)
4 3 34 35 31 12 30 14 13 29 22 21 9 10 27 26 11 28

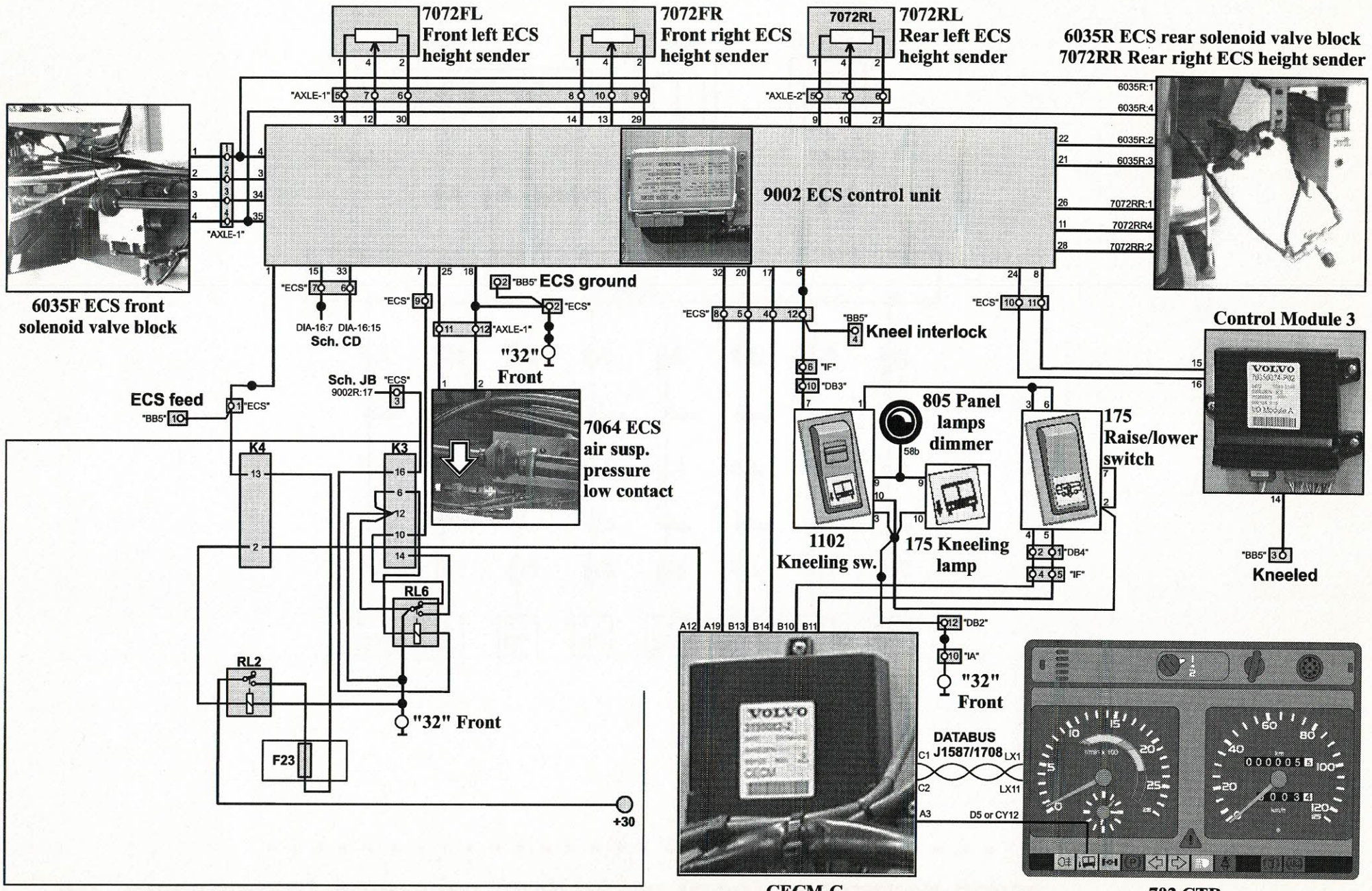

Fuse and relay locations on front electrical centre printed circuit card

JB Electronically-controlled suspension (ECS), articulated buses

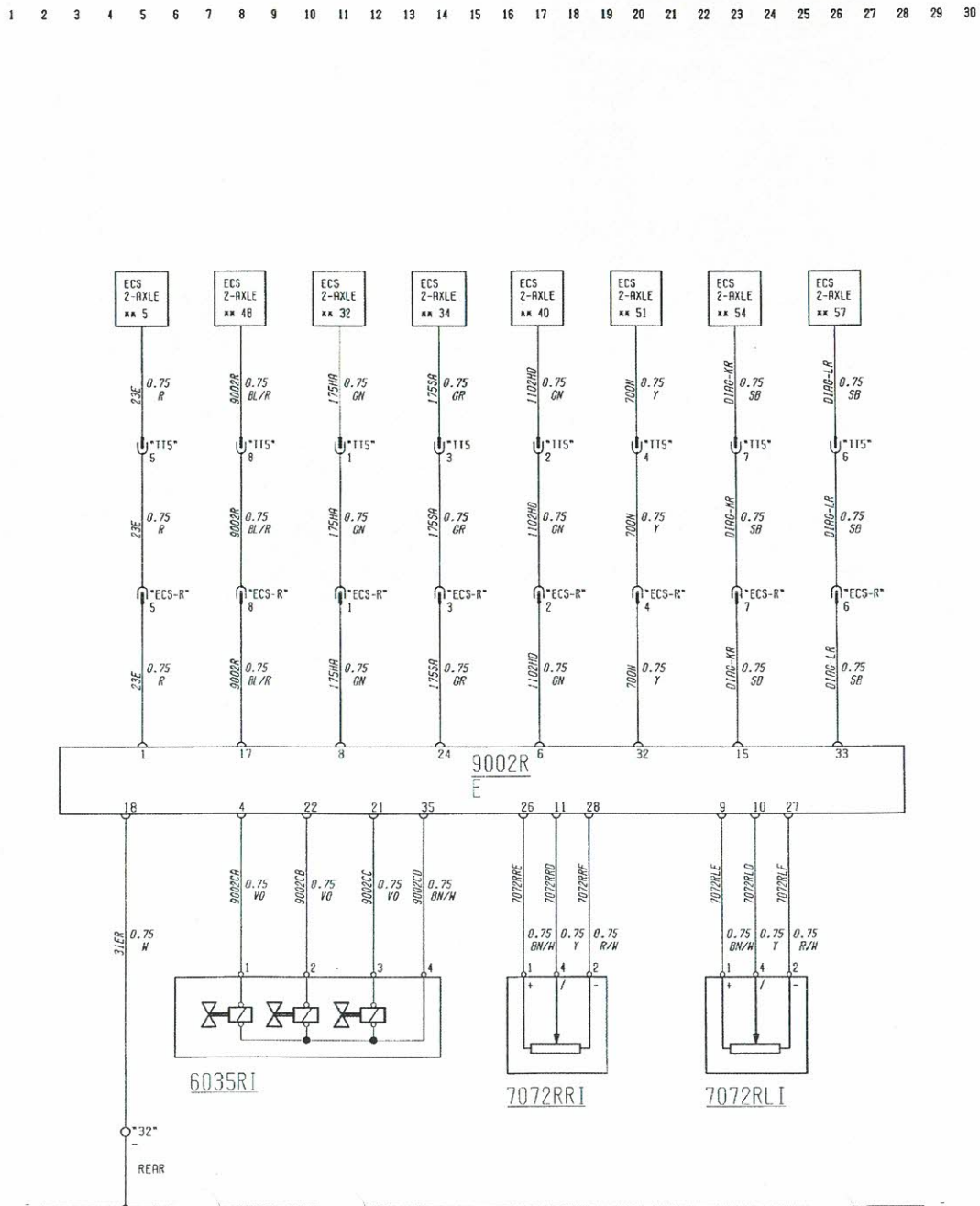

No.	Component
6035RI	ECS solenoid valve block, pusher chassis
7072	ECS height senders
9002R	ECS control unit, pusher chassis

JB Circuit description

Refer to the previous 2-axle circuit description (Schematic JA) for the general principles of operation.

Front and rear ECS control unit diagnostic blink codes

A second ECS control unit (9002R) is installed in articulated buses, located in the rear electrical centre on the pusher chassis. The diagnostic blink codes for this rear control unit are provided by means of pulses from (9002R) pin 17 to relay RL6 on the front electrical centre, thereby pulsing the front ECS control unit (9002) pin 7 and further internally to pin 17. Since the front control unit diagnostic blink codes also go via this same pin 17 on (9002) to the Central Electronic Control Module pin B14, it is not possible for the CECM to distinguish which control unit is sending the diagnostic blink codes.

Note therefore that any fault in either the front or rear ECS systems will initiate blink codes, which are interpreted by the CECM program as "ECS errors" without specifying either the source (front or rear) or the type of fault.

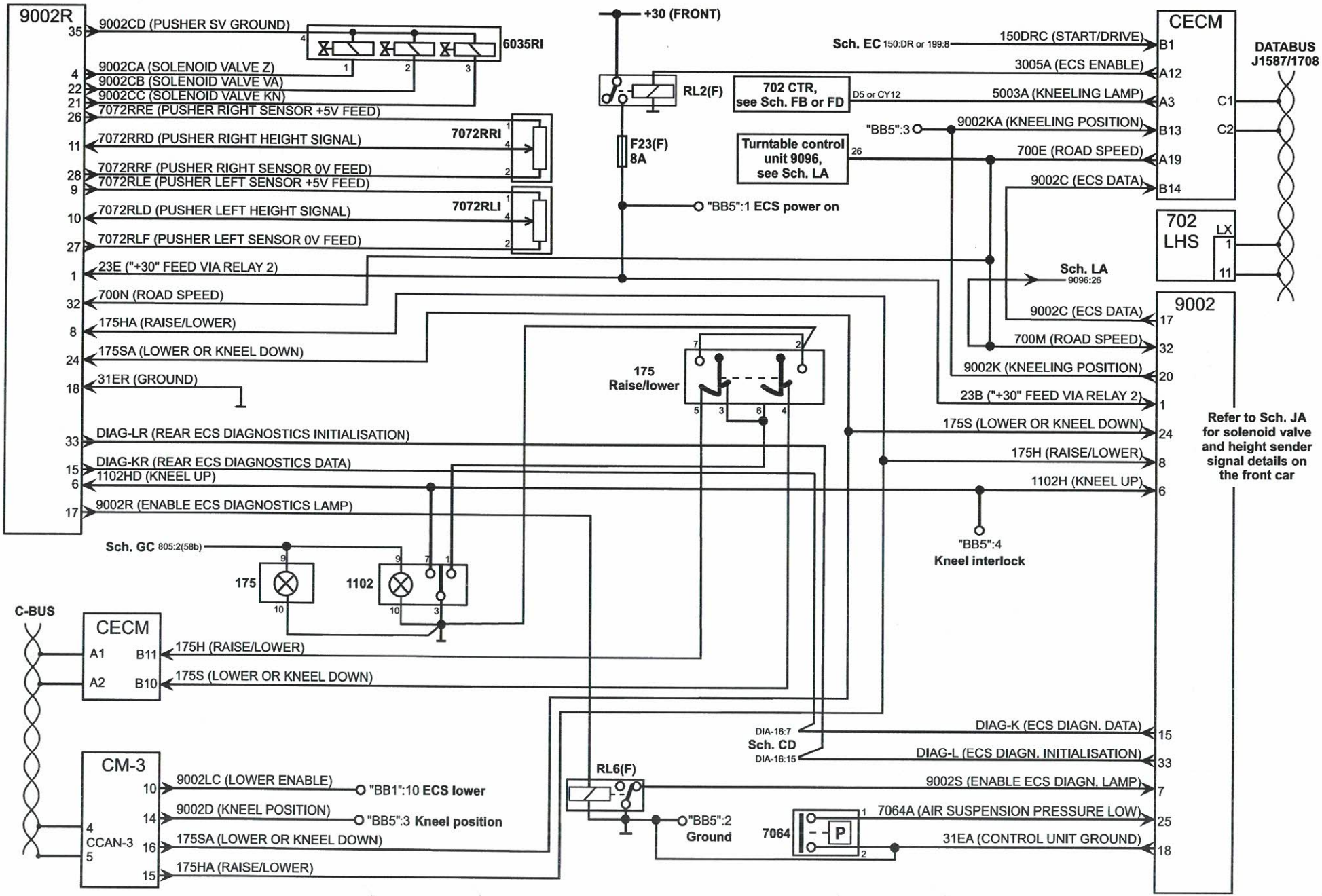
9002R
35 9002CD (PUSHER SV GROUND)
6035RI
4 9002CA (SOLENOID VALVE Z)
22 9002CB (SOLENOID VALVE VA)
21 9002CC (SOLENOID VALVE KN)
26 7072RRE (PUSHER RIGHT SENSOR +5V FEED)
11 7072RRD (PUSHER RIGHT HEIGHT SIGNAL)
7072RRI
28 7072RRF (PUSHER RIGHT SENSOR 0V FEED)
9 7072RLE (PUSHER LEFT SENSOR +5V FEED)
10 7072RLD (PUSHER LEFT HEIGHT SIGNAL)
7072RLI
27 7072RLF (PUSHER LEFT SENSOR 0V FEED)
1 23E ("+30" FEED VIA RELAY 2)
32 700N (ROAD SPEED)
8 175HA (RAISE/LOWER)
24 175SA (LOWER OR KNEEL DOWN)
18 31ER (GROUND)
33 DIAG-LR (REAR ECS DIAGNOSTICS INITIALISATION)
15 DIAG-KR (REAR ECS DIAGNOSTICS DATA)
6 1102HD (KNEEL UP)
17 9002R (ENABLE ECS DIAGNOSTICS LAMP)
+30 (FRONT)
RL2(F)
F23(F)
8A
"BB5":1 ECS power on
Sch. EC 150:DR or 199:8
702 CTR, see Sch. FB or FD
D5 or CY12
Turntable control unit 9096, see Sch. LA
26
"BB5":3
150DRC (START/DRIVE)
3005A (ECS ENABLE)
5003A (KNEELING LAMP)
9002KA (KNEELING POSITION)
700E (ROAD SPEED)
9002C (ECS DATA)
CECM
B1
A12
A3
B13
A19
B14
C1
C2
DATABUS J1587/1708
702 LHS
LX
1
11
Sch. LA
9096:26
9002
17 9002C (ECS DATA)
32 700M (ROAD SPEED)
20 9002K (KNEELING POSITION)
1 23B ("+30" FEED VIA RELAY 2)
24 175S (LOWER OR KNEEL DOWN)
8 175H (RAISE/LOWER)
6 1102H (KNEEL UP)
Refer to Sch. JA for solenoid valve and height sender signal details on the front car
175 Raise/lower
"BB5":4 Kneel interlock
Sch. GC 805:2(58b)
175
1102
C-BUS
CECM
A1 B11 175H (RAISE/LOWER)
A2 B10 175S (LOWER OR KNEEL DOWN)
DIA-16:7
Sch. CD
DIA-16:15
15 DIAG-K (ECS DIAGN. DATA)
33 DIAG-L (ECS DIAGN. INITIALISATION)
7 9002S (ENABLE ECS DIAGN. LAMP)
25 7064A (AIR SUSPENSION PRESSURE LOW)
18 31EA (CONTROL UNIT GROUND)
CM-3
10 9002LC (LOWER ENABLE)
"BB1":10 ECS lower
14 9002D (KNEEL POSITION)
"BB5":3 Kneel position
16 175SA (LOWER OR KNEEL DOWN)
15 175HA (RAISE/LOWER)
4 CCAN-3 5
RL6(F)
"BB5":2 Ground
7064
P

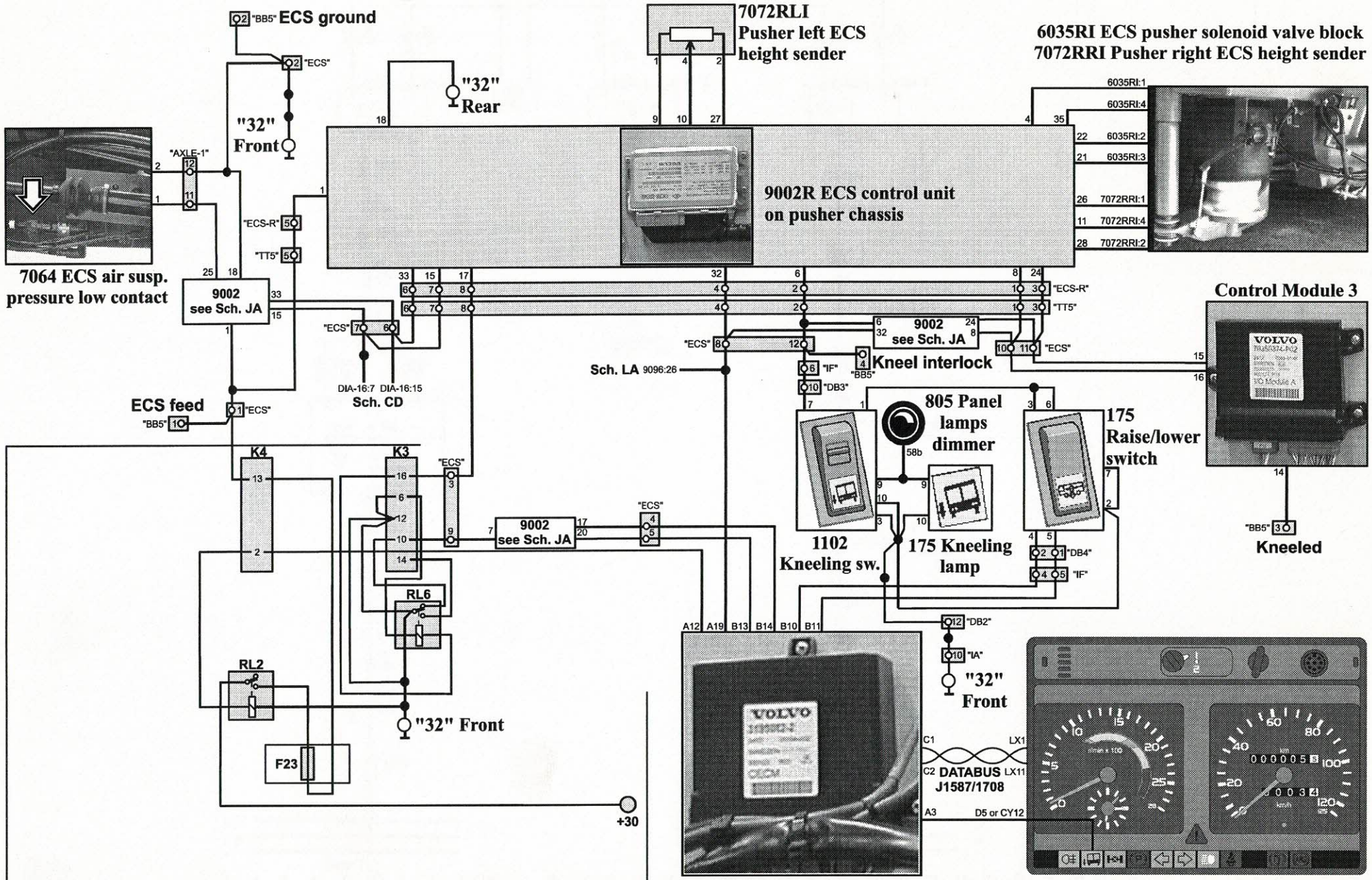

Fuse and relay locations on front electrical centre printed circuit card

CECM-C
Central Electronic Control Module, chassis

702 CTR
Bus Instrument Cluster, centre

KA Fire warning

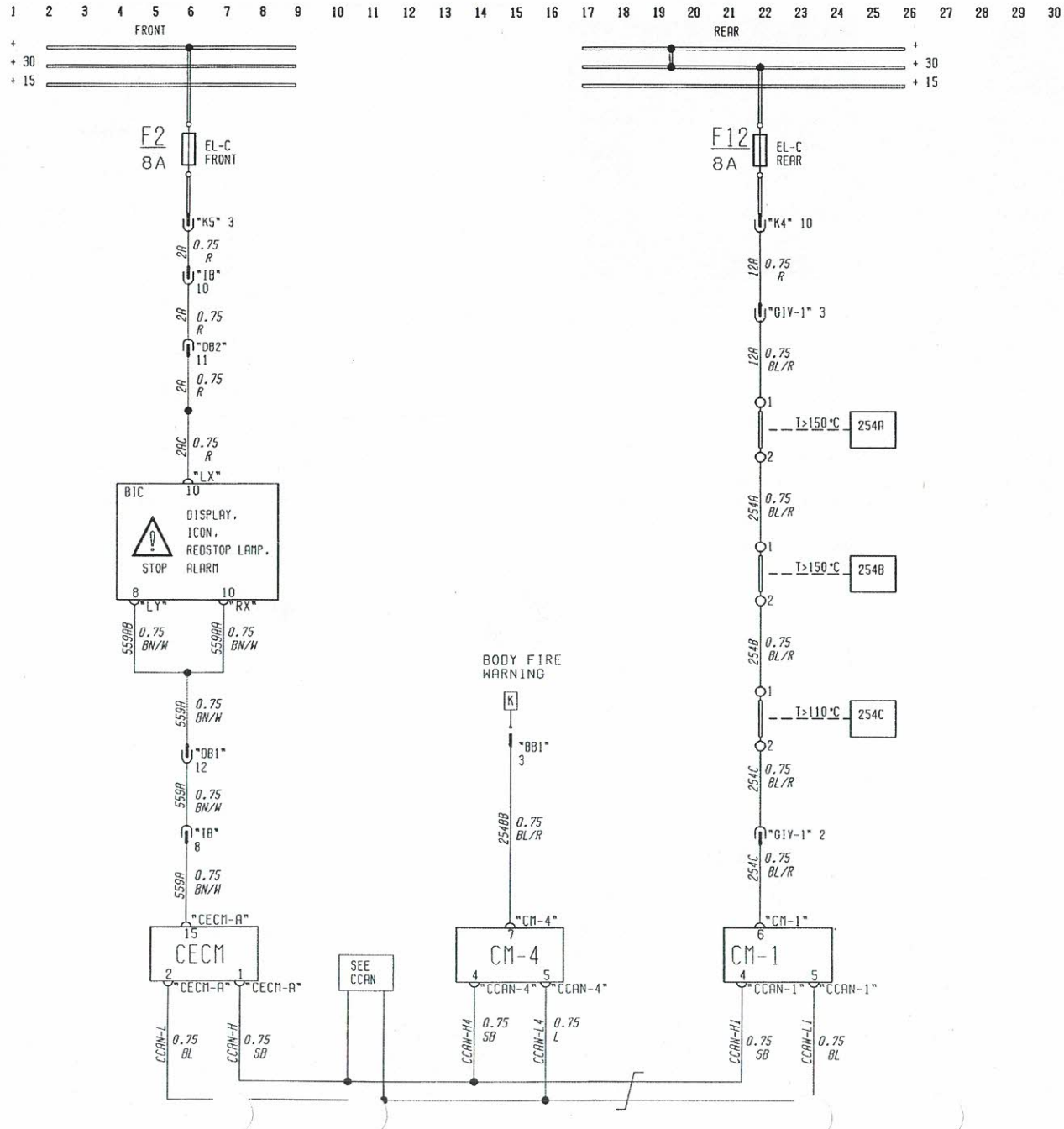

Fuse on front electrical centre card

Fuse	Rating	Circuit protected by fuse
F2	8A	Fire warning indication

Fuse on rear electrical centre card

Fuse	Rating	Circuit protected by fuse
F12	8A	Fire warning sensors

No.	Component
254A	150°C thermal break contact
254B	150°C thermal break contact
254C	110°C thermal break contact
702	Bus Instrument Cluster (BIC)
CECM	Central Electronic Control Module
CM-1	Control Module 1
CM-4	Control Module 4

KA Circuit description

If any of the three thermal break contacts (254A, 254B or 254C) opens due to excessive heat, it will break the +24V connection from F12 in the rear electrical centre to Control Module 1 pin 6. This signal is transmitted via the C-bus to the Central Electronic Control Module (CECM-C) to generate the fire warning alarm. The alarm consists of audible warnings from the internal Bus Instrument Cluster (BIC) audible annunciator and the external buzzer (853), see Schematic FE, plus the illumination of both the red STOP warning lamp on the BIC left hand unit (702LHS) and the red master warning lights on the centre and right hand BIC units (702 CTR) and (702LHS).

If the Bus Instrument Cluster is not active when the fire alarm occurs, it will be activated by a high digital output signal from pin A11 of the CECM-C (see Schematic DD) to the left hand unit (702LHS) pin LY25. This is necessary when the feed or key switch is not in the "drive" position.

The coachbuilder may connect a similar circuit to body connector "BB1" pin 3, so that a high digital input to this pin will be transmitted via Control Module 4 pin 7 and the C-bus to the CECM-C to initiate the alarm sequence in the case of a fire in the bus body. One or more sensors may be installed in series, for example in the luggage compartments.

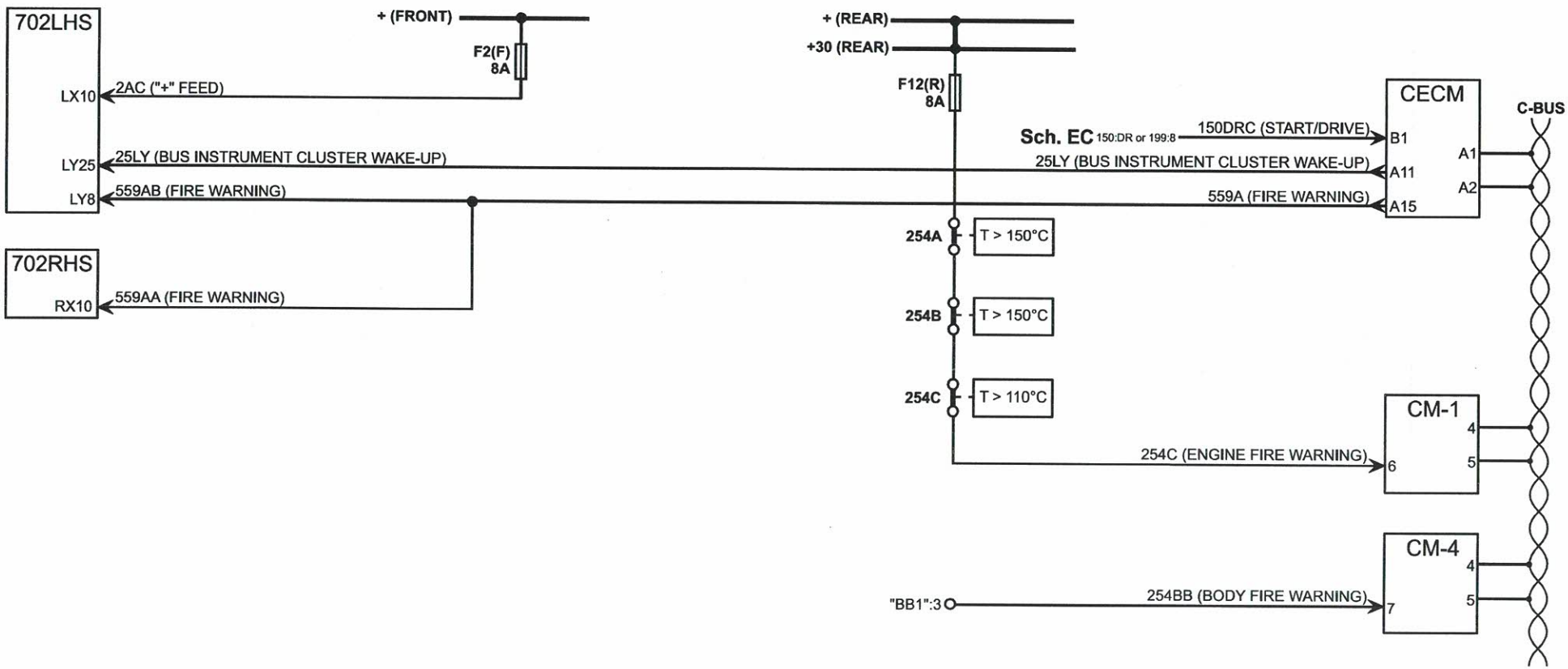
702LHS
LX10
2AC ("+" FEED)
LY25
25LY (BUS INSTRUMENT CLUSTER WAKE-UP)
LY8
559AB (FIRE WARNING)
702RHS
RX10
559AA (FIRE WARNING)
+ (FRONT)
F2(F)
8A
+ (REAR)
+30 (REAR)
F12(R)
8A
Sch. EC 150:DR or 199:8
150DRC (START/DRIVE)
25LY (BUS INSTRUMENT CLUSTER WAKE-UP)
559A (FIRE WARNING)
CECM
B1
A11
A15
A1
A2
C-BUS
254A
T > 150°C
254B
T > 150°C
254C
T > 110°C
254C (ENGINE FIRE WARNING)
CM-1
6
4
5
"BB1":3
254BB (BODY FIRE WARNING)
CM-4
7
4
5

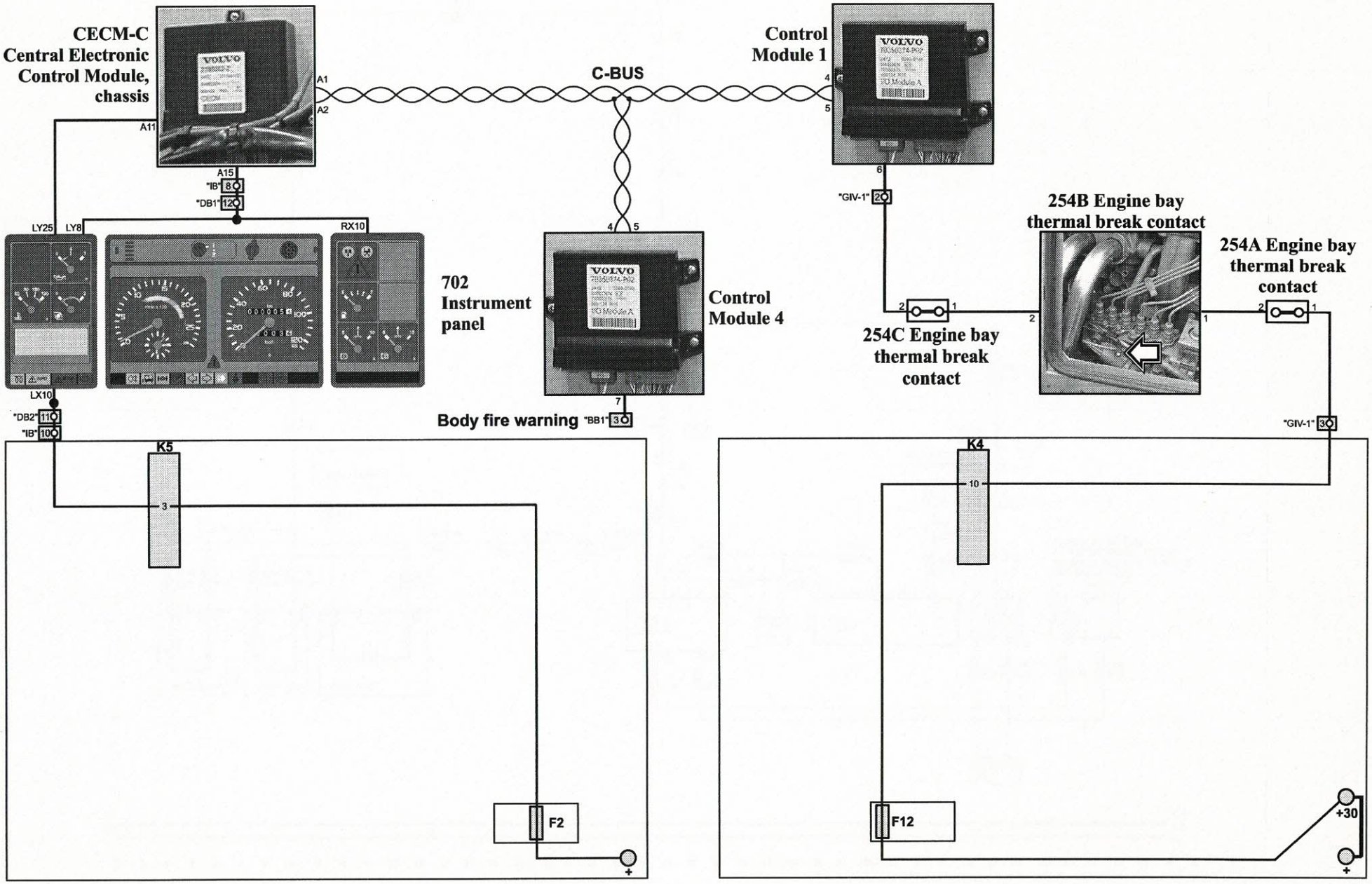

Fuse and relay locations on front electrical centre printed circuit card

Fuse and relay locations on rear electrical centre printed circuit card

KB Parking brake

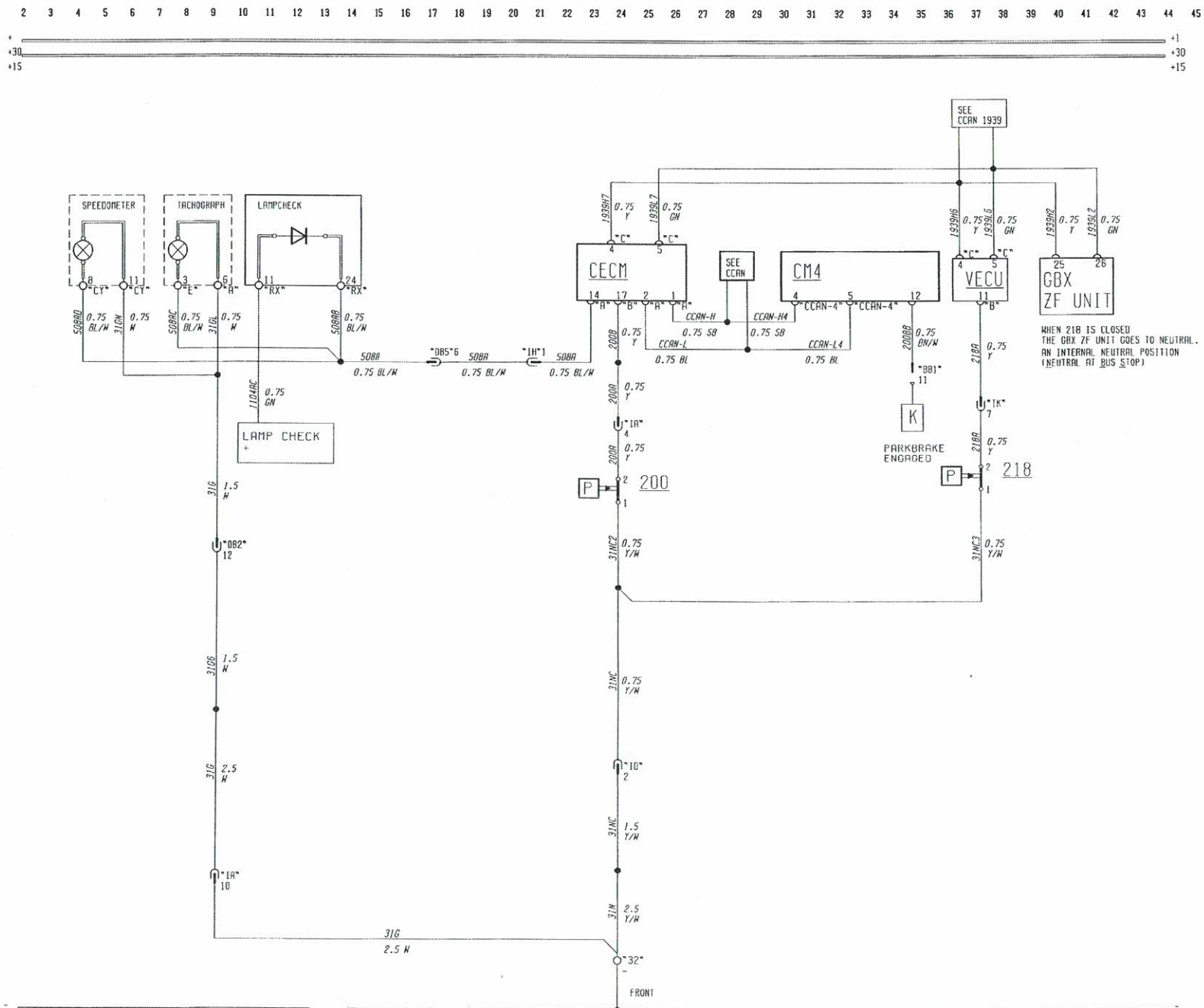

No.	Component
200	Parking brake contact
218	Auxiliary parking brake contact
909	ZF automatic transmission control unit
9074	Vehicle Electronic Control Unit
CECM	Central Electronic Control Module
CM-4	Control Module 4

KB Circuit description

The parking brake is engaged when there is no pressure in the parking brake pneumatic circuit. In this condition the parking brake contact (200) is closed, and therefore grounds pin B17 of the Central Electronic Control Module (CECM-C).

Conversely, when the parking brake is released, the pneumatic circuit receives enough pressure to force the parking brake cylinder pistons against spring pressure and release the brakes. This pressure is also enough to open the parking brake contact (200), which then opens the circuit to CECM-C pin B17.

If the feed (199) or key (150) switch is set to "drive", thus sending the Central Electronic Control Module (CECM-C) pin B1 high, *and* the parking brake is released, as detected by the CECM pin B17 input from the parking brake contact (200) floating, *and* the driver's door or gate is opened, an audible warning will sound and the parking brake off warning lamp (508) on the Bus Instrument Cluster centre unit (702CTR) will light (see also Schematic FB or FD).

Body connection

Control Module 4 pin 12 goes high to supply a +24V output to body connector "BB1" pin 11 when the parking brake is engaged. This output may have been used by the coachbuilder to operate a further safety device to warn the driver not to leave the bus without applying the parking brake.

Auxiliary parking brake contact (218)

This contact is used to signal the parking brake status to the Vehicle Electronic Control Unit (9074) via pin PB11 for steering wheel adjustment; refer to Schematic KF for further information.

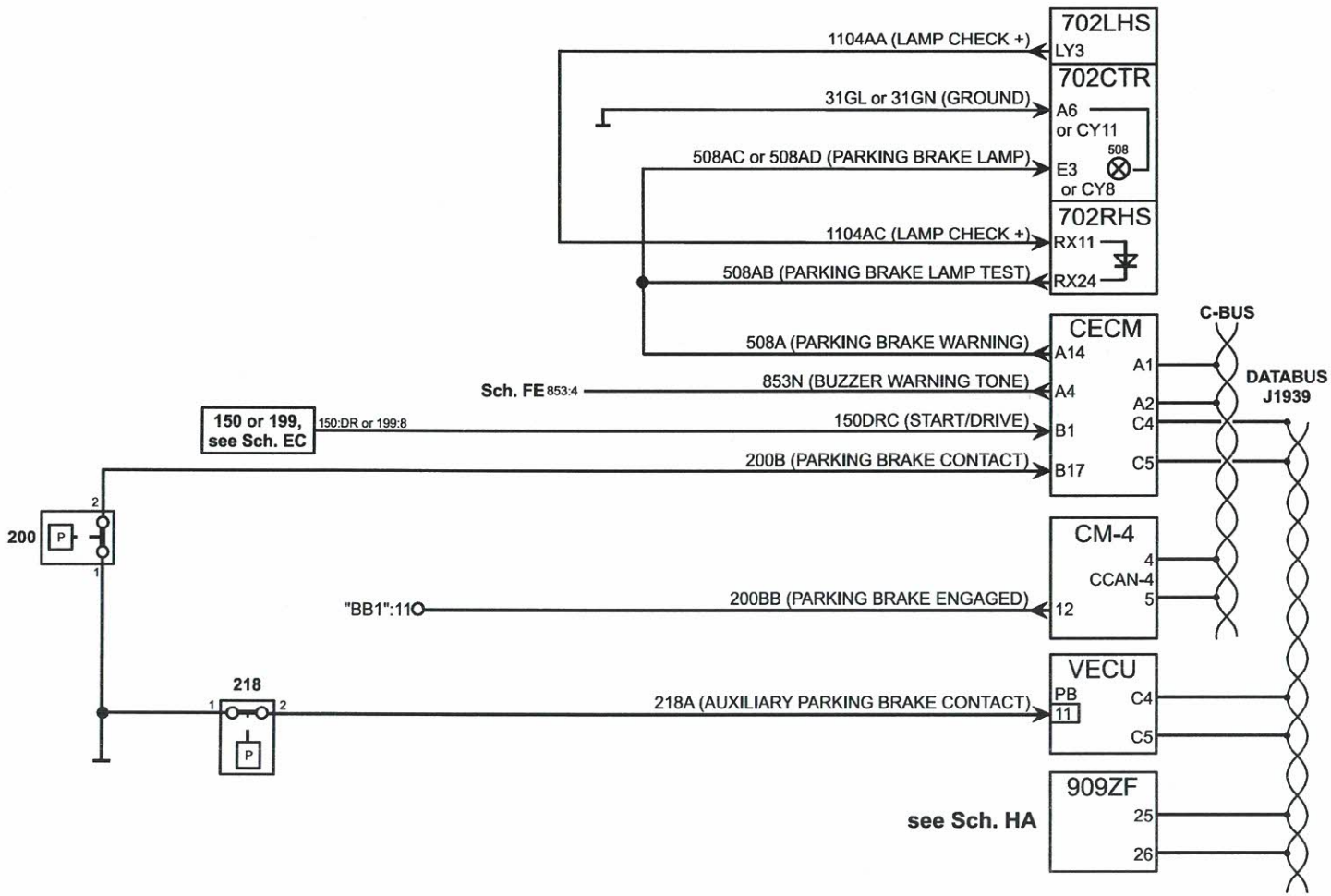
702LHS
LY3
1104AA (LAMP CHECK +)
702CTR
31GL or 31GN (GROUND)
A6
or CY11
508
508AC or 508AD (PARKING BRAKE LAMP)
E3
or CY8
702RHS
1104AC (LAMP CHECK +)
RX11
508AB (PARKING BRAKE LAMP TEST)
RX24
C-BUS
CECM
508A (PARKING BRAKE WARNING)
A14
A1
DATABUS
J1939
Sch. FE 853:4
853N (BUZZER WARNING TONE)
A4
A2
150 or 199,
see Sch. EC
150:DR or 199:8
150DRC (START/DRIVE)
B1
C4
200B (PARKING BRAKE CONTACT)
B17
C5
200
2
1
CM-4
4
CCAN-4
5
"BB1":11
200BB (PARKING BRAKE ENGAGED)
12
218
1
2
VECU
PB
11
C4
218A (AUXILIARY PARKING BRAKE CONTACT)
C5
909ZF
see Sch. HA
25
26

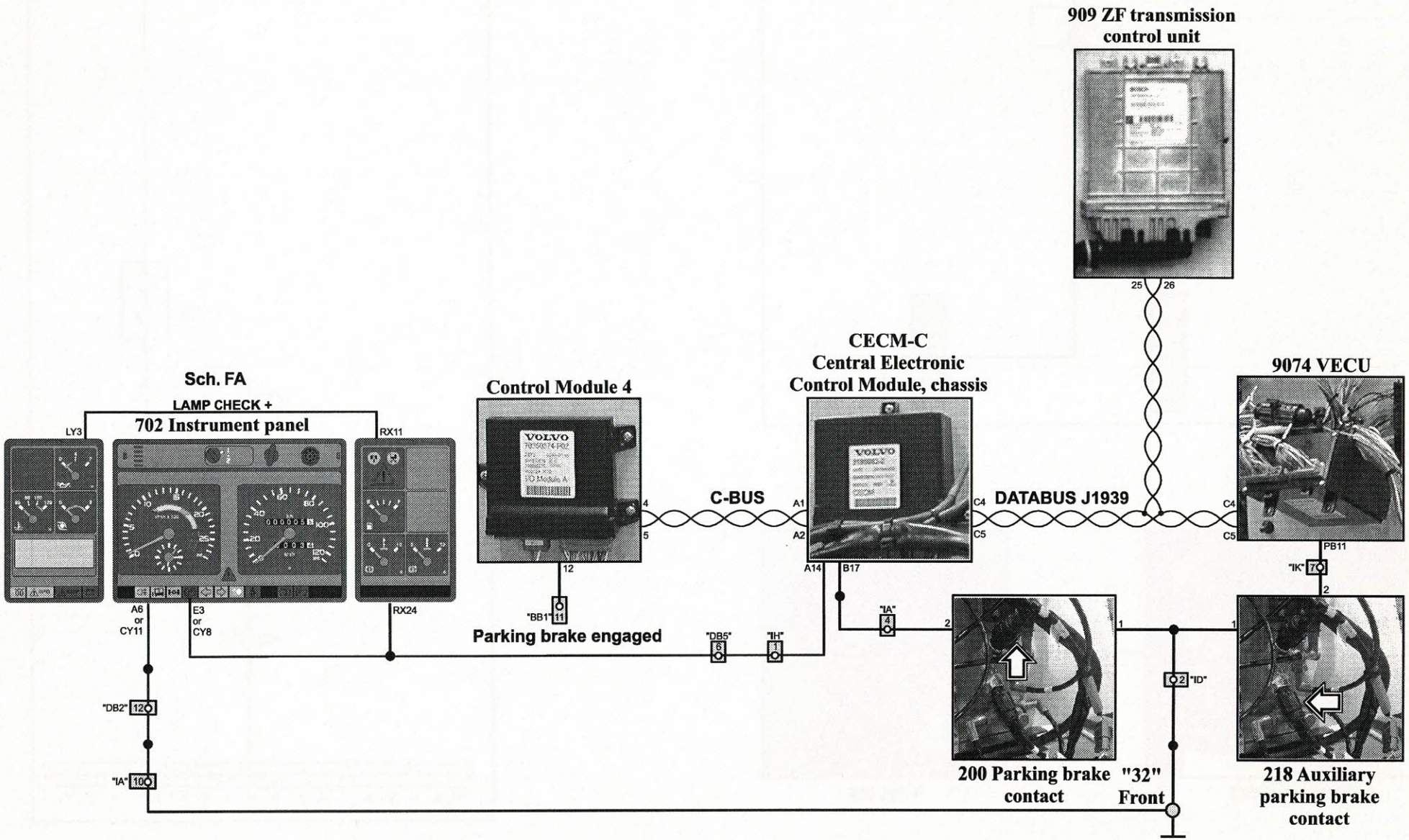
909 ZF transmission control unit
25
26
CECM-C
Central Electronic Control Module, chassis
9074 VECU
Sch. FA
LAMP CHECK +
702 Instrument panel
LY3
RX11
Control Module 4
4
5
C-BUS
A1
A2
C4
DATABUS J1939
C5
C4
C5
PB11
"IK" 7
2
12
"BB1" 11
Parking brake engaged
A14
B17
"IA" 4
2
1
1
"DB5" 8
"IH" 1
A6 or CY11
E3 or CY8
RX24
"ID" 2
"DB2" 12
"IA" 10
200 Parking brake contact
"32" Front
218 Auxiliary parking brake contact

KC Horn

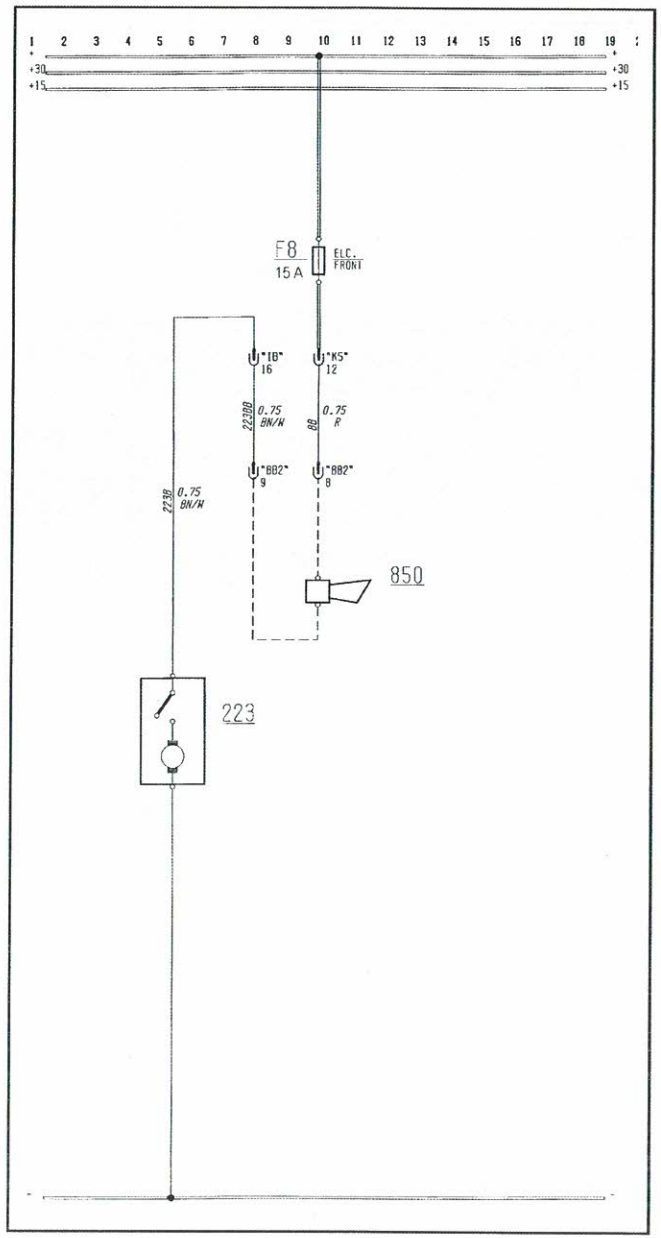

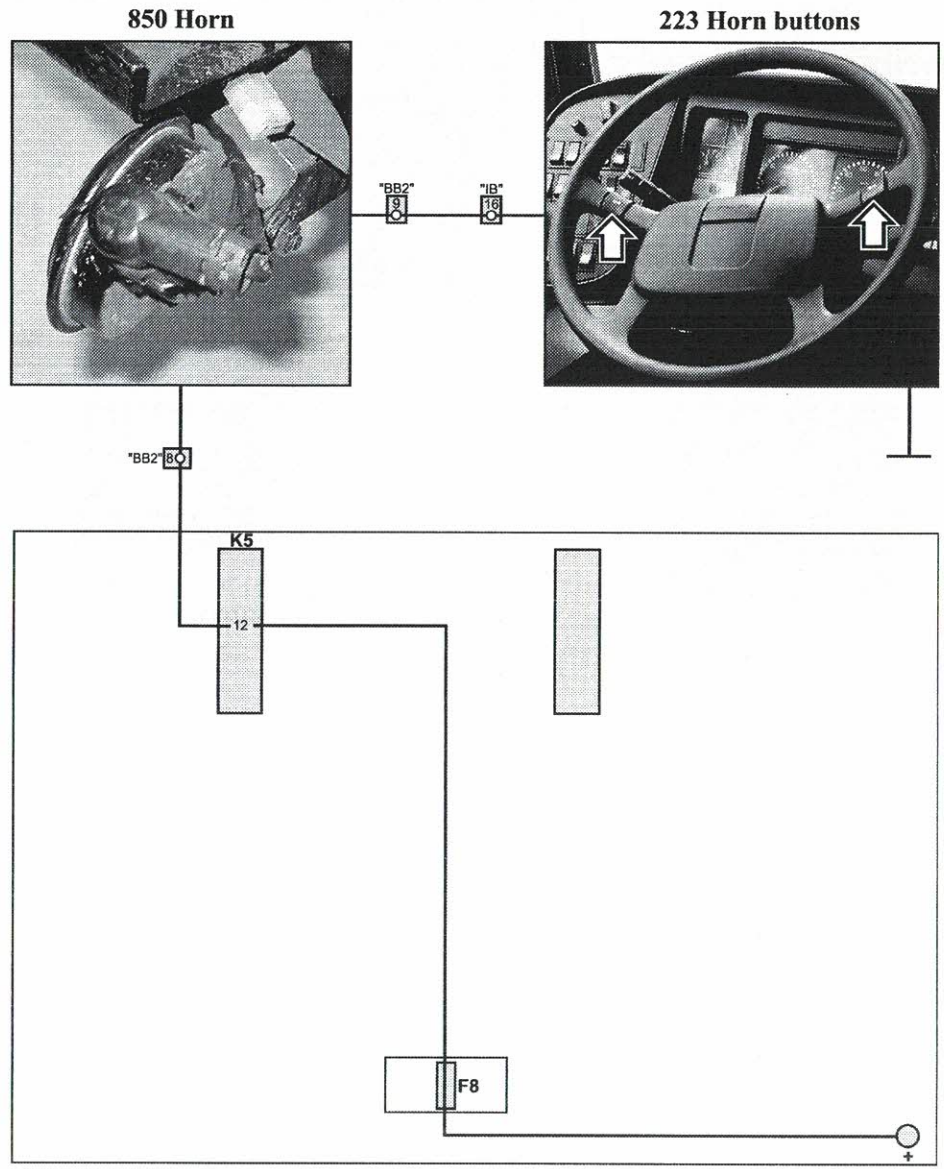

Fuse and relay locations on front electrical centre printed circuit card

Fuse on front electrical centre card

Fuse	Rating	Circuit protected by fuse
F8	15A	Horn

No.	Component
223	Horn buttons and ring in steering wheel
850	Horn

KG Circuit description

Horn

The coachbuilder connects the horn between body connector "BB2" pins 8 and 9. Fed from the "+" line via fuse F8 in the front electrical centre, the horn is sounded by operation of the horn buttons in the steering wheel, which by means of the horn ring slip ring connections (223) ground "BB2" pin 9.

KF Steering wheel adjustment

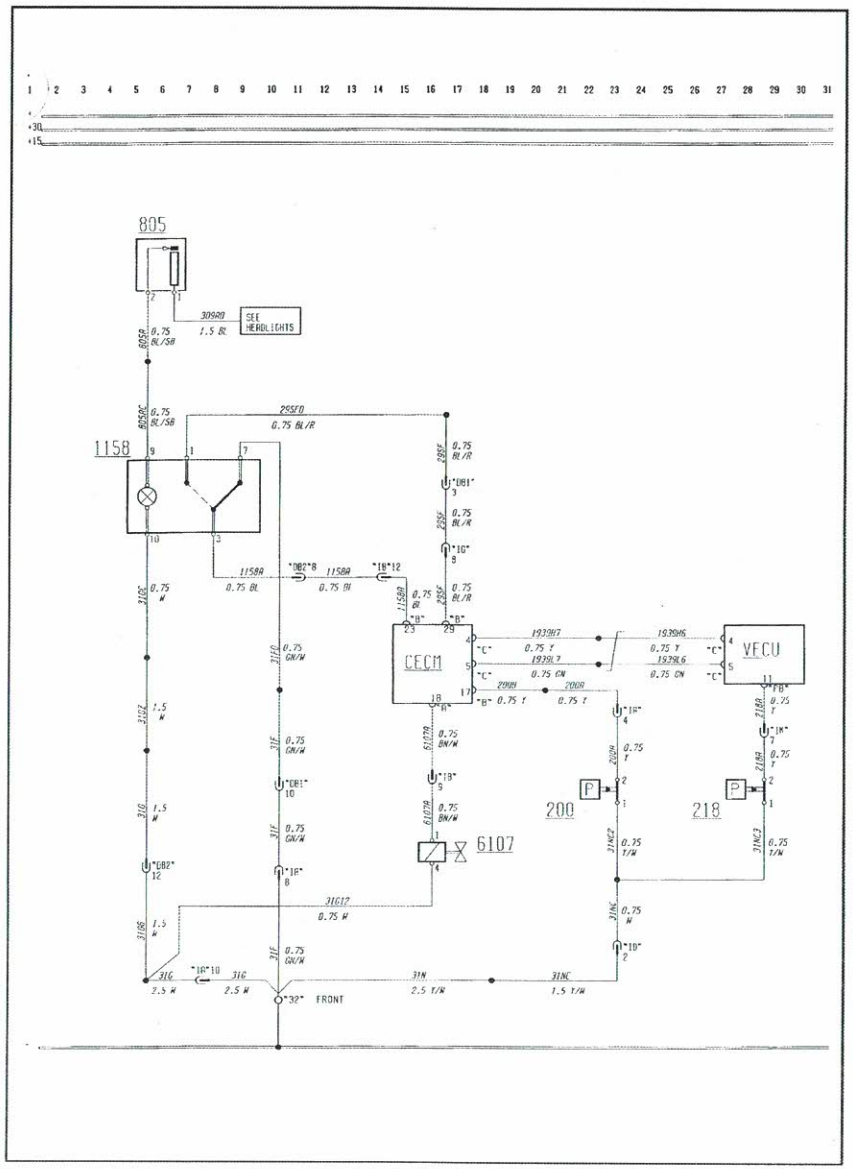

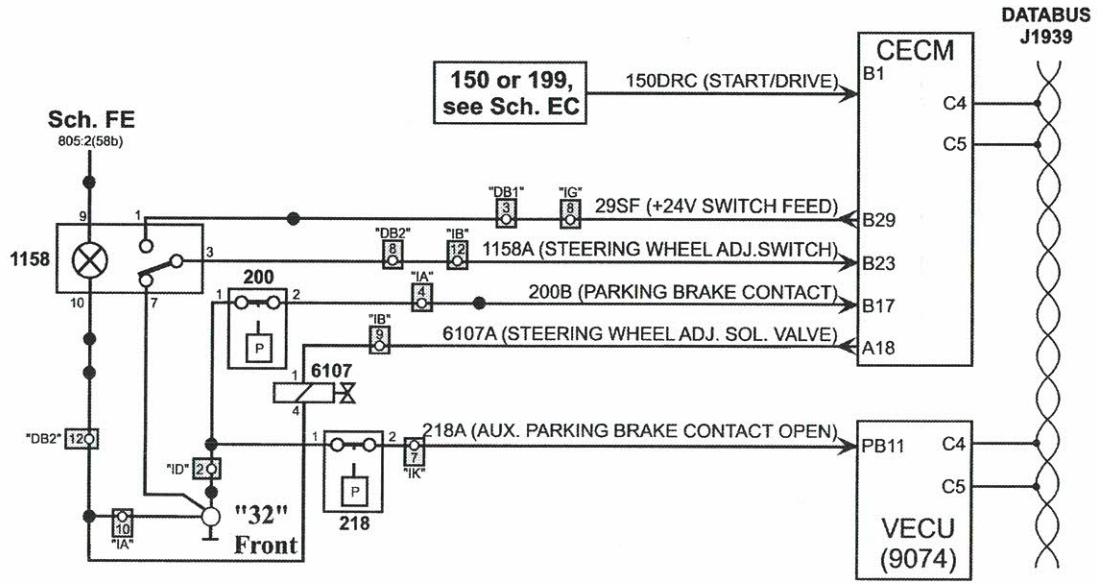

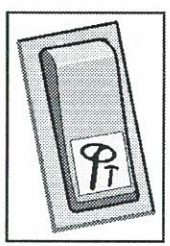

1158 Steering wheel adjustment switch

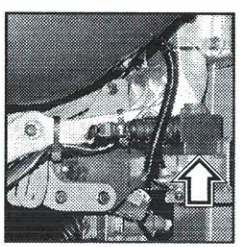

6107 Steering wheel adjustment solenoid valve

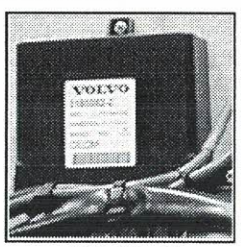

CECM-C

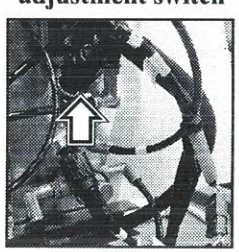

200
Parking brake contact

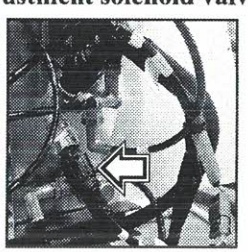

218 Auxiliary parking brake contact

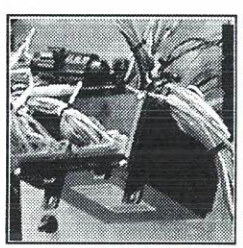

9074 VECU

No.	Component
200	Parking brake contact
218	Auxiliary parking brake contact
805	Panel lamps dimmer rheostat
1158	Steering wheel adjustment switch
6107	Steering wheel adjustment solenoid valve
9074	Vehicle Electronic Control Unit (VECU)
CECM-C	Central Electronic Control Module, chassis

KF Circuit description

Adjustment of the steering wheel position is only permitted if:

- the parking brake is engaged (indicated by both the contact (200) being closed, grounding the Central Electronic Control Module pin B17

- *and* the auxiliary parking brake contact (218) is closed, grounding the Vehicle Electronic Control Unit (9074) pin PB11

- *and* the key or feed switch is set to "drive", presenting a high digital input to the CECM-C pin B1, ensuring that there will be current available to operate the steering wheel adjustment solenoid valve.

The bus road speed must also be zero, as signalled by the speed sensor (7052) to the VECU and then via the databus to the CECM-C (refer to Schematic FB or FD).

If all these conditions are correct, operating the steering wheel adjustment switch (1158) will place a high digital input on pin B23 of the CECM-C, which in turn transmits a high digital output from pin A18 to energise the steering wheel adjustment solenoid valve (6107). This releases the steering column to permit adjustment, but only for 3.5 seconds, determined by a timing function within the CECM-C.

KG Air brake pressure gauges

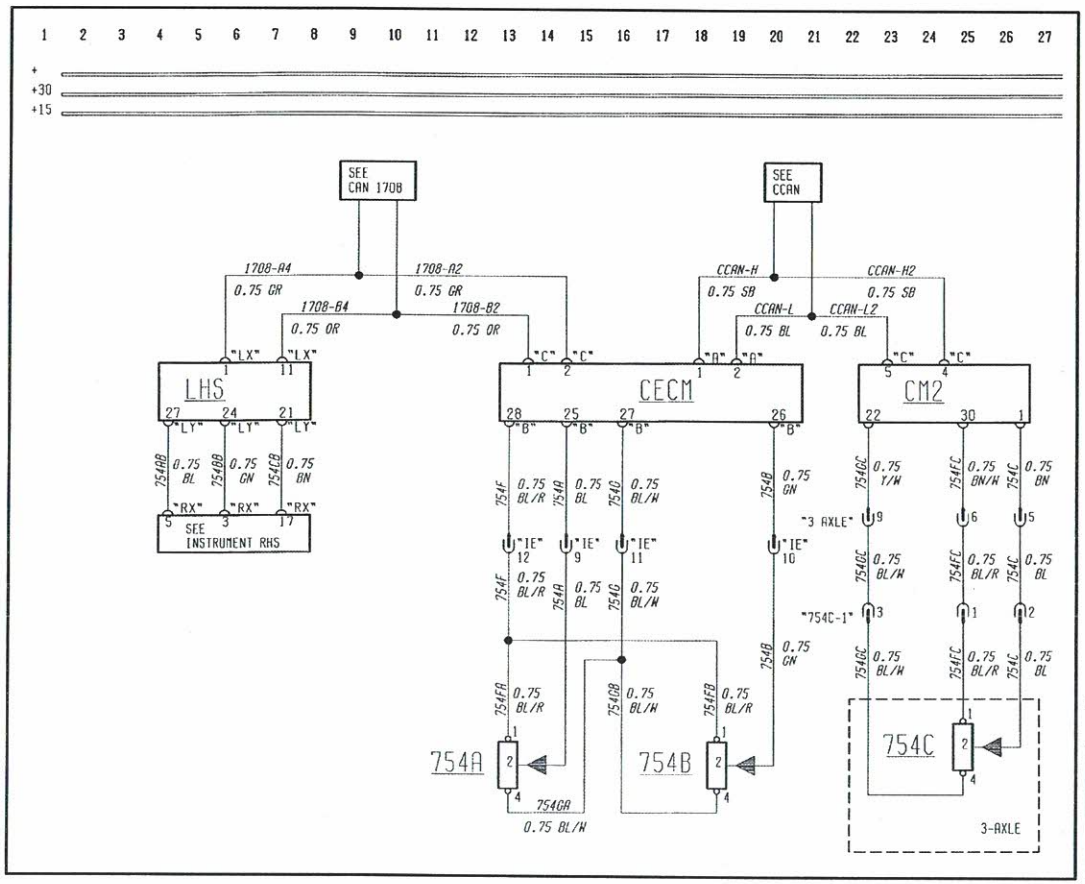

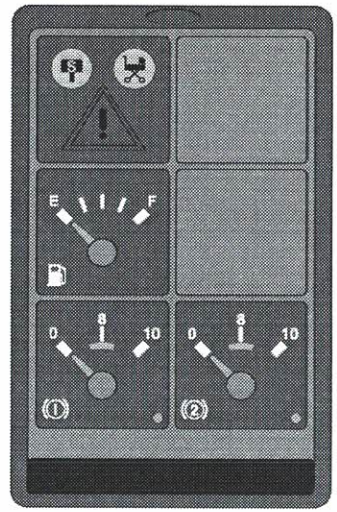

Brake pressure gauges on 702RHS, Bus Instrument Cluster, right hand side

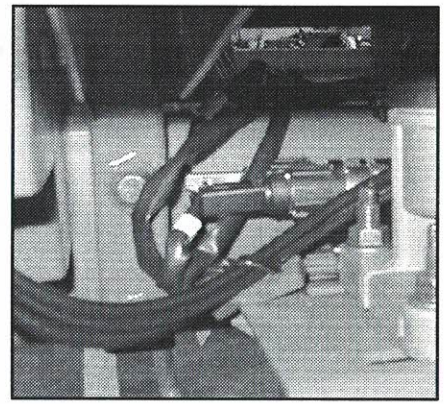

754
Typical brake circuit air pressure sender

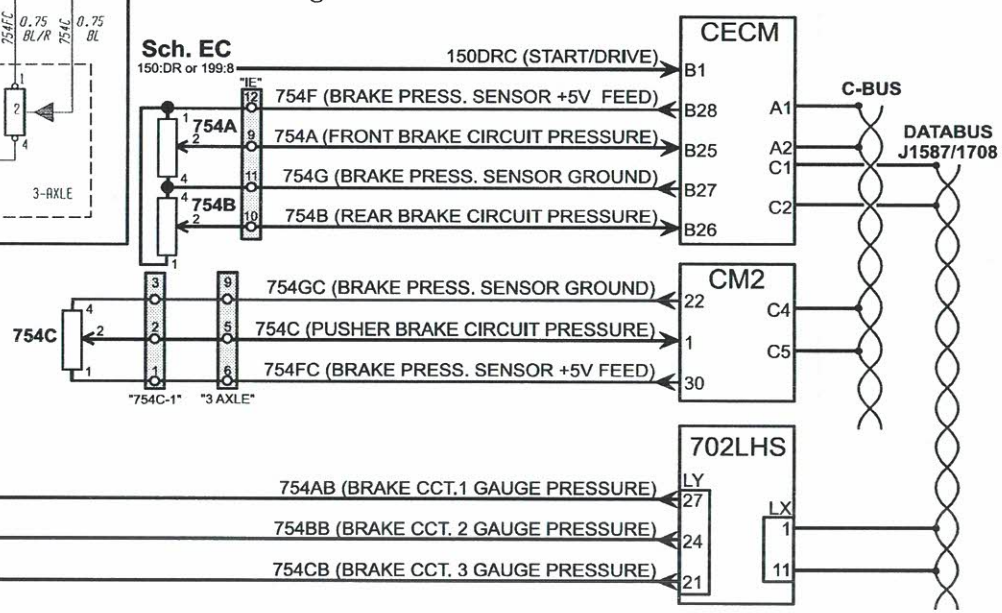

No.	Component
754A	Air pressure sender, front brake circuit
754B	Air pressure sender, rear brake circuit
754C	Air pressure sender, pusher brake circuit, articulated buses
CECM-C	Central Electronic Control Module, chassis
CM-2	Control Module 2
702LHS	Bus Instrument Cluster (BIC), left hand side
702RHS	Bus Instrument Cluster (BIC), right hand side

KG Circuit description

Brake circuit pressure indications depend on the feed (199) or key (150) switch being set to the drive position, providing a high digital input to pin B1 of the Central Electronic Control Module (CECM-C). The front brake circuit pneumatic pressure is sensed by air pressure sender (754A) which transmits an analog signal to the CECM-C pin B25. The rear circuit pressure analog signal is received by the CECM at pin B26. The front (754A) and rear (754B) senders are supplied by a +5V sensor feed from CECM-C pin B28, and the return line is the sensor ground at CECM-C pin B27.

In articulated buses, Control Module 2 provides the sensor feed and ground for the Car 2 pusher brake circuit sender (754C) at pins 30 and 22 respectively, with the analog signal being received at pin 1 for onward transmission to the CECM-C via the C-bus. An End-of-Line (EOL) parameter tells the internal programs if the bus is articulated, so that the third brake pressure circuit will be monitored.

The incoming analog pressure signals are converted into digital form and transmitted via the J1587/1708 databus to the Bus Instrument Cluster right hand side (702RHS) where they are shown on the gauges.

If any of the sensed analog inputs, representing actual brake circuit pressure, is detected by the CECM as being outside the programmed range, the warning LED at the bottom right corner of the appropriate gauge lights, as does the master warning lamp on the right side of the Bus Instrument Cluster. In addition a buzzer sounds if the brake pressure falls below the minimum permitted level while the engine is running.

The minimum permissible brake pressure in any circuit is 5 bar, the gauge maximum limit is 10.55 bar and the sender limits are 0 bar and 15 bar. If the incoming pressure signal is in excess of 10.55 bar, the CECM-C program prevents the gauge from attempting to show any higher value and stays at the maximum reading.

KH Fuel level indication

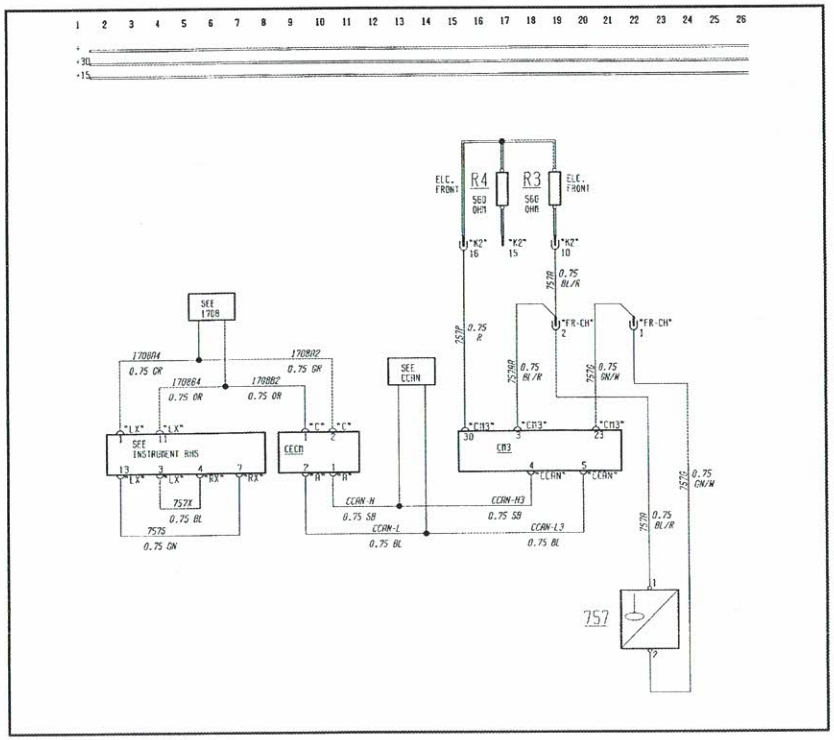

757 Fuel level sender

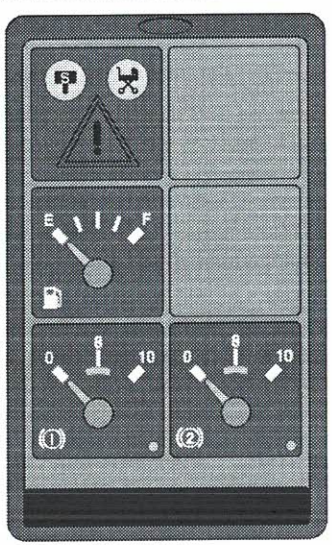

Fuel level gauge
on 702 RHS,
Bus Instrument Cluster,
right hand side

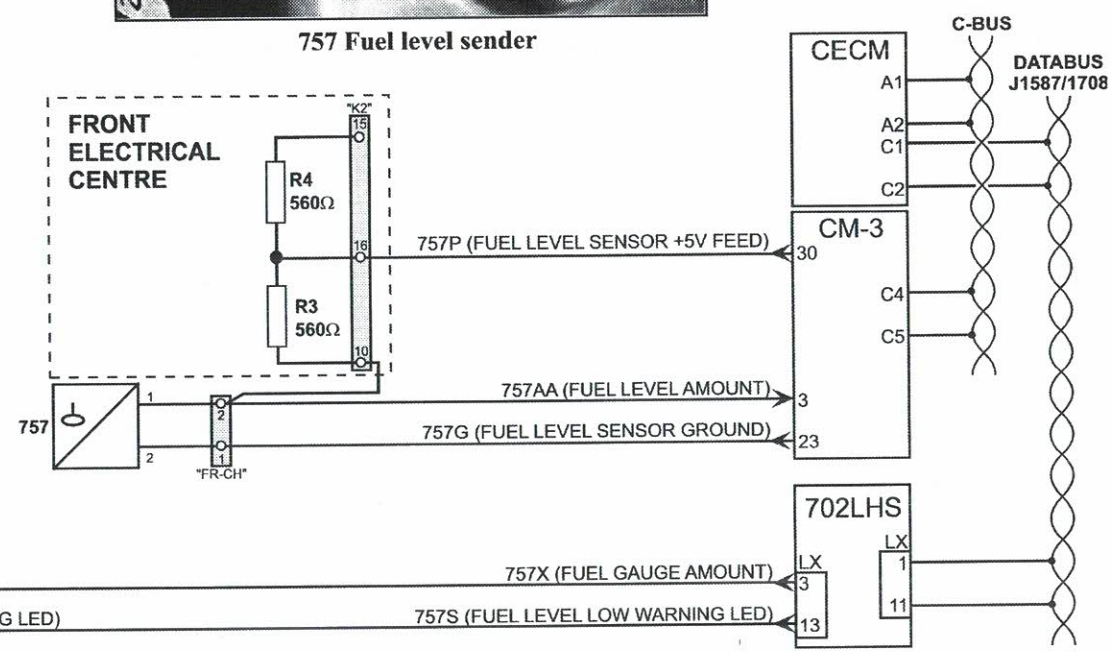

Resistors on front electrical centre card

Resistor	Value	Circuit
R3	560 ohms	Fuel level sensor
R4	560 ohms	Fuel level sensor

No.	Component
702RHS	Bus Instrument Cluster (BIC), right hand side
757	Fuel level sender
CECM-C	Central Electronic Control Module, chassis
CM-3	Control Module 3

Circuit descriptions

Fuel level indication

The +5V feed from Control Module 3 pin 30 is split by a voltage divider consisting of 560 ohm resistors R3 and R4 in the front electrical centre. The reduced voltage is applied to the fuel level sender (757) which transmits the fuel level analog signal to pin 3 of Control Module 3. The sensor ground connection is at Control Module 3 pin 23. The fuel level amount analog signal at pin 3 is converted into a digital signal and sent via the C-bus to the Central Electronic Control Module (CECM-C). This retransmits the digital fuel amount signal via the J1587/1708 databus to the Bus Instrument Cluster left hand side (702LHS). The signal finally reaches the fuel gauge via (702LHS) pin LX3 and (702RHS) pin RX4.

Fuel level low warning

If the CECM detects from the value of the incoming digitised fuel amount signal that the fuel level is low, it sends a warning via the J1587/1708 databus, (702LHS) pin LX13 and (702RHS) pin RX7 to light the low fuel level LED at the bottom right corner of the fuel gauge.

KJ Door brake

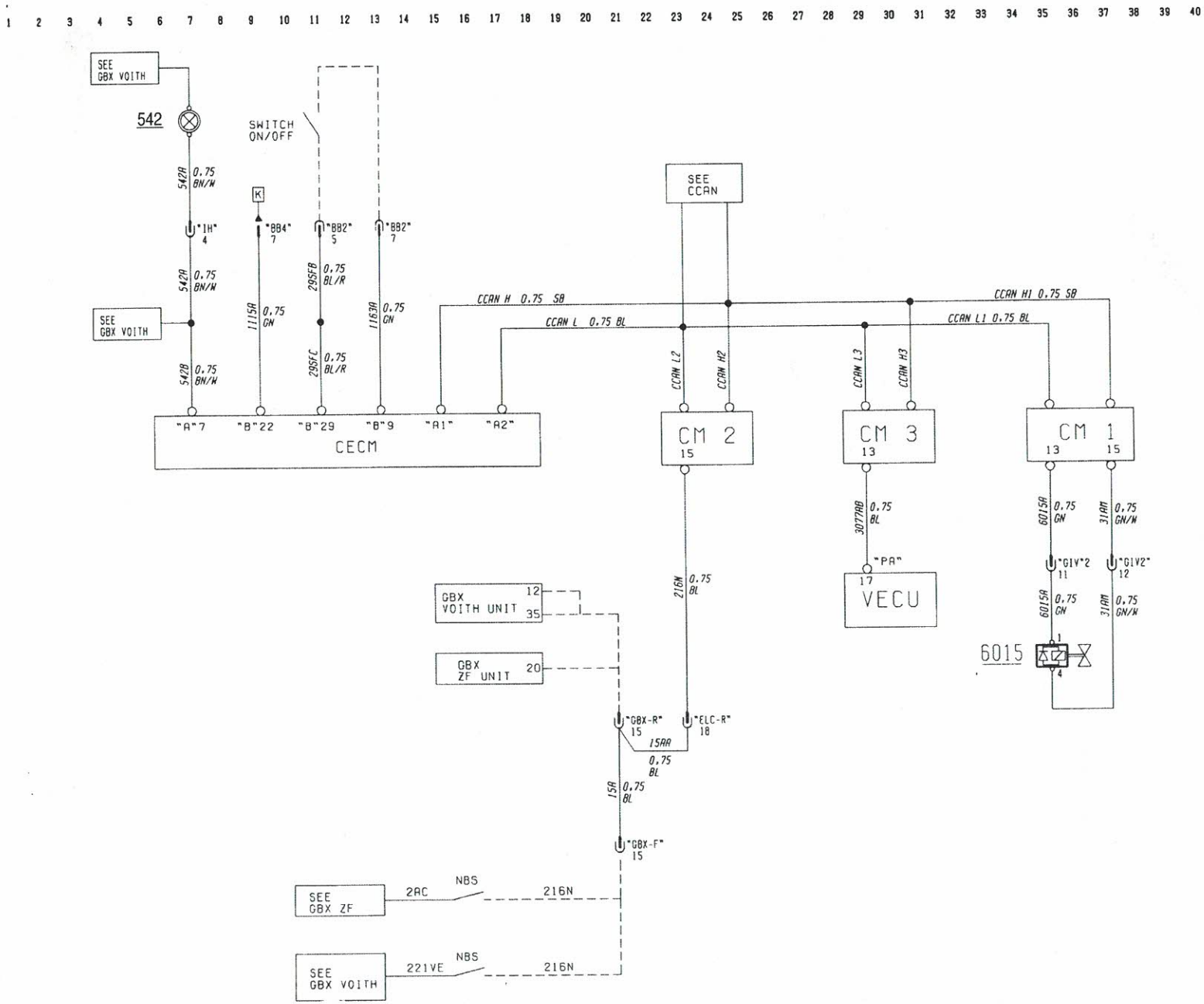

No.	Component
542	Door brake warning lamp
6015	Doors solenoid valve
9074	Vehicle Electronic Control Unit (VECU)
CECM-C	Chassis Electronic Control Module
CM-1	Control Module 1
CM-2	Control Module 2
CM-3	Control Module 3

Circuit description

If any door is open or the bus is kneeling, the door brake function keeps the brakes applied, to ensure that bus cannot move while passengers are entering or exiting.

Note: The revised door brake function described here applies to production buses from chassis number 1195 onwards.

A door brake request signal is received by the CECM at pin B9 as a high digital input derived from the +24V switch feed signal at CECM pin B29 when the body-mounted switch connected between "BB2" pins 5 and 7 closes. This takes place when any door is opened or the bus begins to kneel. Control Module 1 pins 13 and 15 then energise the door brake solenoid valve (6015) to apply the parking brake. At the same time, if the bus is equipped with a Voith or ZF automatic transmission, Control Module 2 will transmit a signal from pin 15 to set the transmission into the Neutral on Bus Stop (NBS) condition; see Schematic HA or HB as applicable. The VECU (9074) also receives a signal at pin PA 17 from Control Module 3 pin 13 to set the engine to low idle.

The driver is reminded that door braking has been applied by the door brake warning lamp (542) on the centre BIC module, initiated by a signal from pin A7 of the CECM-C.

When all the doors are closed and the bus is not kneeling, the door brake request signal at "BB2" pins 5 and 7 is cancelled and the resulting (6015), (NBS), engine low idle and (542) signals are also cancelled, permitting the parking brake to be released, a gear to be selected in the automatic transmission and the engine speed to increase.

The driver may override the door brake function, releasing the brakes even if there is a door open or the bus is kneeled. In this case the override signal is received by the CECM-C at pin B22 via "BB4" pin 7 from a driver's switch wired into the body.

LA Turntable, articulated buses

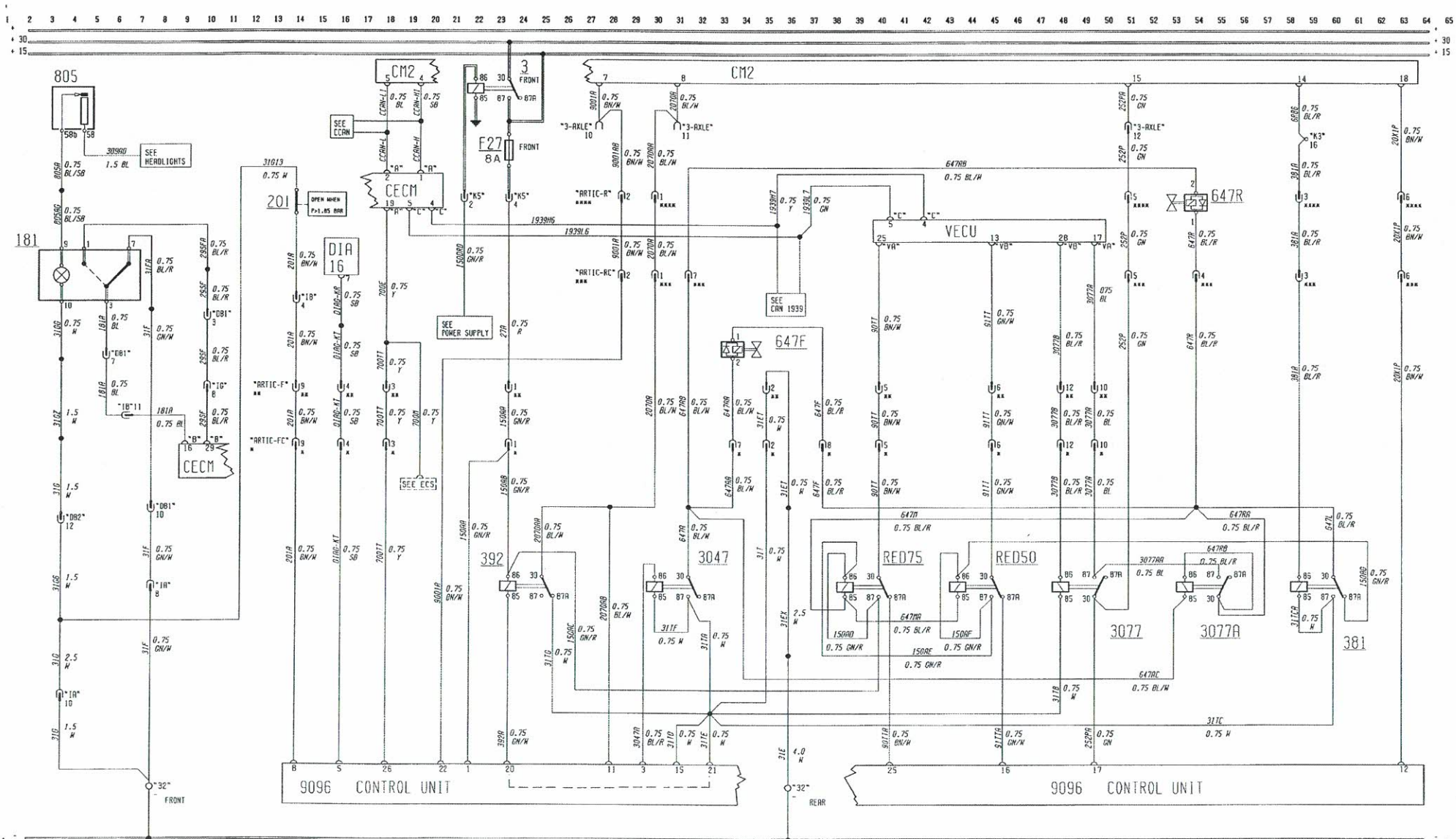

Fuse and relay on front electrical centre card

Fuse	Rating	Circuit protected by fuse
F27	8A	Turntable control unit (9096)

Relay	Circuit
RL3	"+15" feed to Turntable control unit (9096)

No.	Component
181	Jack-knife override switch
201	Footbrake pressure contact
381	Jack-knife release relay
392	Turntable feed warning relay
647F	Jack-knife release sol. valve, front
647R	Jack-knife release sol. valve, rear
805	Panel lamps dimmer rheostat
3047	Jack-knife brake relay
3077	Reversing speed limit relay
3077A	Jack-knife engine idle relay
9074	Vehicle Electronic Control Unit
9096	Turntable control unit
CECM-C	Central Electronic Control Module, chassis
CM-2	Control Module 2
DIA-16	16-pole diagnostic connector
RED50	Engine 50% of max. power relay
RED75	Engine 75% of max. power relay

Circuit description

Control system for B7LA pusher buses

Because the engine is at the rear, two hydraulic cylinders are necessary to control the forces acting between the two parts of the bus, Car 1 and Car 2. The joint stiffness is determined by a control unit (9096) located on the middle electrical centre, at the front end of Car 2. It receives turntable angle signals, a road speed input from the CECM-C, a braking signal from (201), reversing information from CM-2 and hydraulic pressure from a pressure sensor on the proportional valve. A digital program inside the control unit (9096) compares the received signals with predefined conditions and opens or closes the proportional valve accordingly to reduce or increase the hydraulic pressure in the cylinders connecting connecting Car 1 and Car 2.

Starting sequence

When the bus is started and the turntable system receives power from F27 (front), the yellow INFO warning lamp is lit and the turntable hydraulics low pressure icon is displayed. These stay on until the footbrake pedal has been pressed hard enough to reach at least 1.8 bar pressure in the footbrake circuit, and then released. The icon then changes to jack-knifing, which remains, with the INFO lamp lit, until the bus road speed rises above 3 km/h. The INFO lamp and icon then disappear, if there is no error in the road speed signal, or some other turntable system fault.

Normal forward driving, moving off round corners on steep hills, and braking

The cylinder stiffness is varied automatically according to the road speed, but if certain turntable angles are reached, the engine power may be reduced by (9096) signals from pins 25 and 16 to the VECU (9074), via the de-energised relays (RED75) and (RED50). The maximum engine power available will be reduced to 75% at the first stage (VECU pin PA25 input), and to 50% at the second stage (VECU pin PB13 input). If the bus is on a bend on a steep hill, the driver may override these limitations briefly by using the jack-knife override switch (181), which, via the CECM-C pin 16 and the J1939 databus, sends CM-2 pin 14 high, energising the jack-knife release relay (381). This in turn energises (RED75) and (RED50), sending the VECU inputs PA25 and PB13 high, to release the throttle restrictions. If the footbrake is applied while driving forward, the signal from contact (201) to (9096) pin 8, combined with the road speed input at pin 26, causes the (9096) program to stiffen the hydraulic cylinders as required to prevent jack-knifing.

Turntable operation when reversing

On buses with ZF transmissions, engine power is immediately reduced to 50% by a signal from (9096) pin 16 to the VECU (9074) pin PB13 when reverse gear is engaged, signalled at (9096) pin 17 input. At a certain speed-dependent angle during reversing the (9096) program lights the yellow INFO lamp. If the angle continues to increase or speed increases, (9096) pin 3 output energises the jack-knife brake relay (3047) to energise the front and rear jack-knife release solenoid valves (647F and 647R). These release air to apply the parking brake. Meanwhile the engine idle relay (3077A) reduces the engine power to idling. If a forward gear is now selected, the (9096) program will release the parking brake. Otherwise, the driver may continue to reverse by using the jack-knife override switch (181) which energises the jack-knife release relay (381). This closes the jack-knife release solenoid valves (647F and 647R) to allow air into the brake cylinders and release the brakes. However, if the angle increases even further to 54 degrees, a bump stop is reached. If the reversing speed exceeds 5 km/h, this is detected by the VECU (9074), which energises the reversing speed limit relay (3077) to switch the engine to idling via VECU (9074) pin PA17. Note that B7L Artic buses with Voith transmissions, which have their own reversing limitations, are delivered without the reversing speed limit relay (3077) installed. The engine power in these buses remains unlimited during reversing until a certain predefined reversing angle is reached, when the 25% then 50% reductions will be switched in.

WARNING The driver must apply the parking brake before switching off the ignition; if the parking brake has been applied automatically as described above during reversing, it will be released when the engine is switched off.

Fault indications during driving

Minor faults, which mean that the bus can continue to be driven but must visit a workshop soon, are indicated by the yellow INFO lamp lighting, and the jack-knifing icon appearing on the display at the left side of the Bus Instrument Cluster. This type of warning is the result of low digital outputs from both pins 11 and 22 on the control unit (9096) to CM-2 pins 8 and 7 respectively. In the case of a serious turntable fault, only (9096) pin 11 will go low, and this will light the red STOP lamp and display either the jack-knifing or turntable hydraulic pressure low icon.

Updating CECM-C software on buses from chassis number 1289 onwards

Note that the 252PA signal is required at CM-2 pin 13 in the new software on these particular buses. This means that the wire previously connected to CM-2 pin 15 must be transferred to CM-2 pin 13.

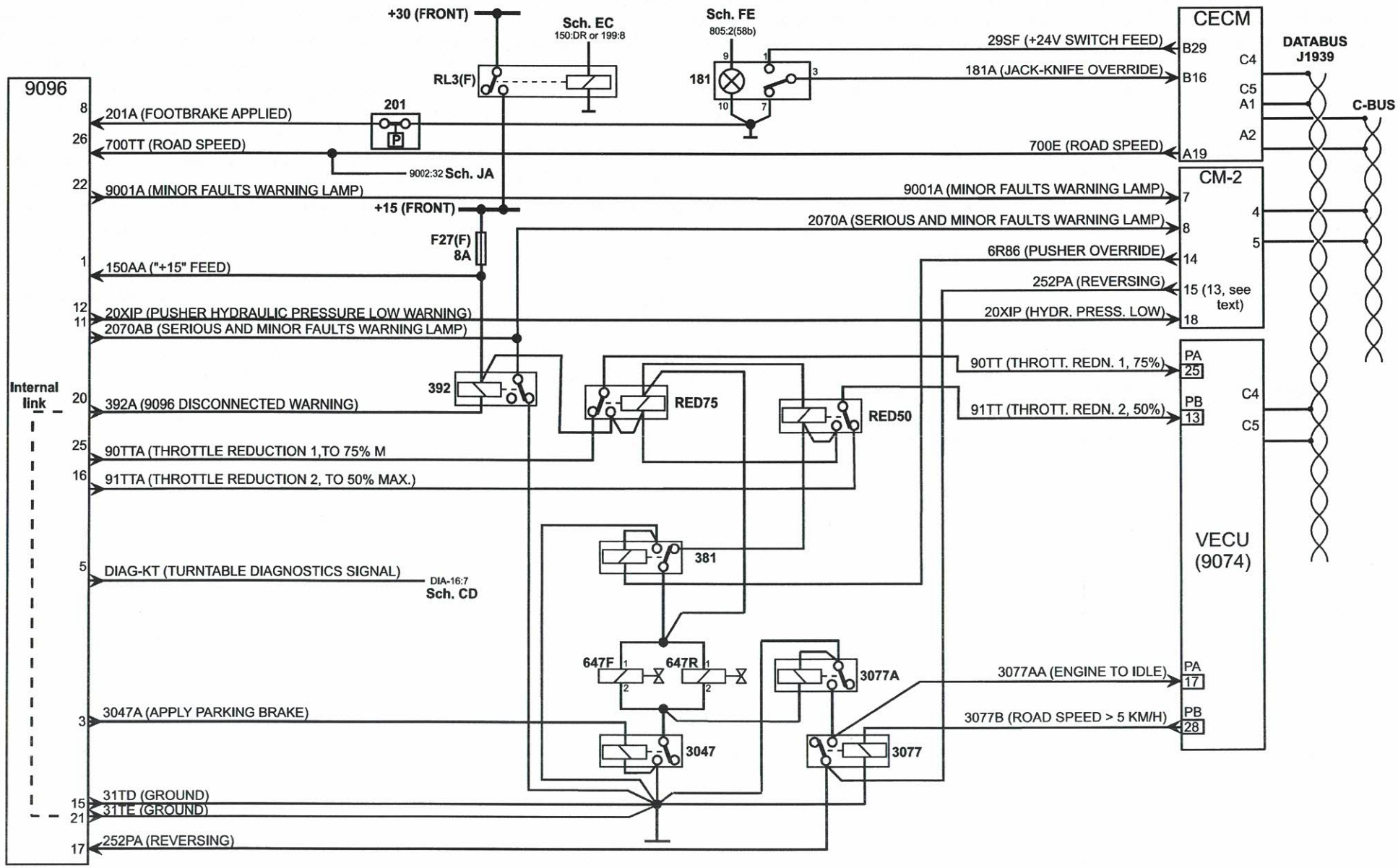
9096
Internal link
8 201A (FOOTBRAKE APPLIED)
26 700TT (ROAD SPEED)
9002:32 Sch. JA
22 9001A (MINOR FAULTS WARNING LAMP)
1 150AA ("+15" FEED)
12 20XIP (PUSHER HYDRAULIC PRESSURE LOW WARNING)
11 2070AB (SERIOUS AND MINOR FAULTS WARNING LAMP)
20 392A (9096 DISCONNECTED WARNING)
25 90TTA (THROTTLE REDUCTION 1,TO 75% M
16 91TTA (THROTTLE REDUCTION 2, TO 50% MAX.)
5 DIAG-KT (TURNTABLE DIAGNOSTICS SIGNAL)
DIA-16:7 Sch. CD
3 3047A (APPLY PARKING BRAKE)
15 31TD (GROUND)
21 31TE (GROUND)
17 252PA (REVERSING)
+30 (FRONT)
Sch. EC
150:DR or 199:8
RL3(F)
201
P
+15 (FRONT)
F27(F)
8A
392
RED75
RED50
381
647F
647R
3047
3077A
3077
Sch. FE
805:2(58b)
181
29SF (+24V SWITCH FEED)
181A (JACK-KNIFE OVERRIDE)
700E (ROAD SPEED)
9001A (MINOR FAULTS WARNING LAMP)
2070A (SERIOUS AND MINOR FAULTS WARNING LAMP)
6R86 (PUSHER OVERRIDE)
252PA (REVERSING)
20XIP (HYDR. PRESS. LOW)
90TT (THROTT. REDN. 1, 75%)
91TT (THROTT. REDN. 2, 50%)
3077AA (ENGINE TO IDLE)
3077B (ROAD SPEED > 5 KM/H)
CECM
B29
B16
A19
C4
C5
A1
A2
CM-2
7
8
14
15 (13, see text)
18
4
5
VECU (9074)
PA 25
PB 13
PA 17
PB 28
C4
C5
DATABUS J1939
C-BUS

150 Key switch

199 Feed switch

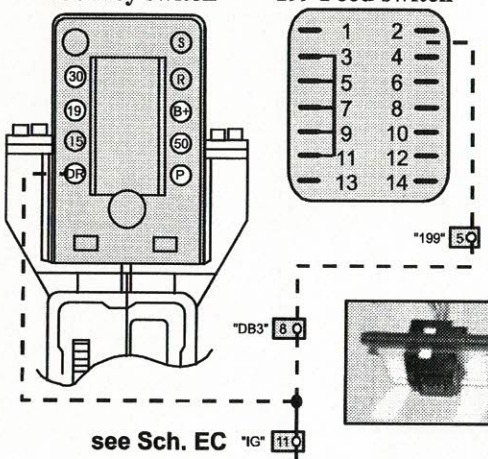

Fuse and relay locations on front electrical centre printed circuit card

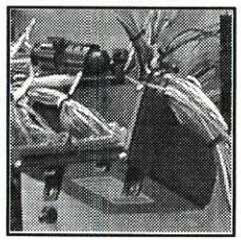

9074 VECU

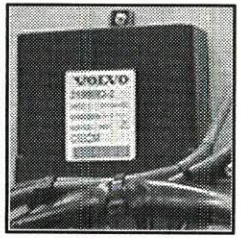

CECM-C

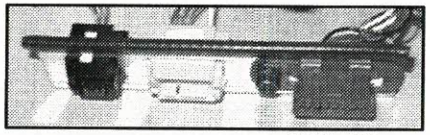

DIA-16

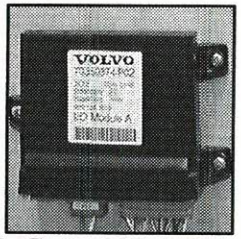

Control Module 2

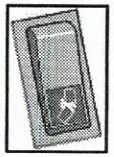

181 Jack-knife override switch

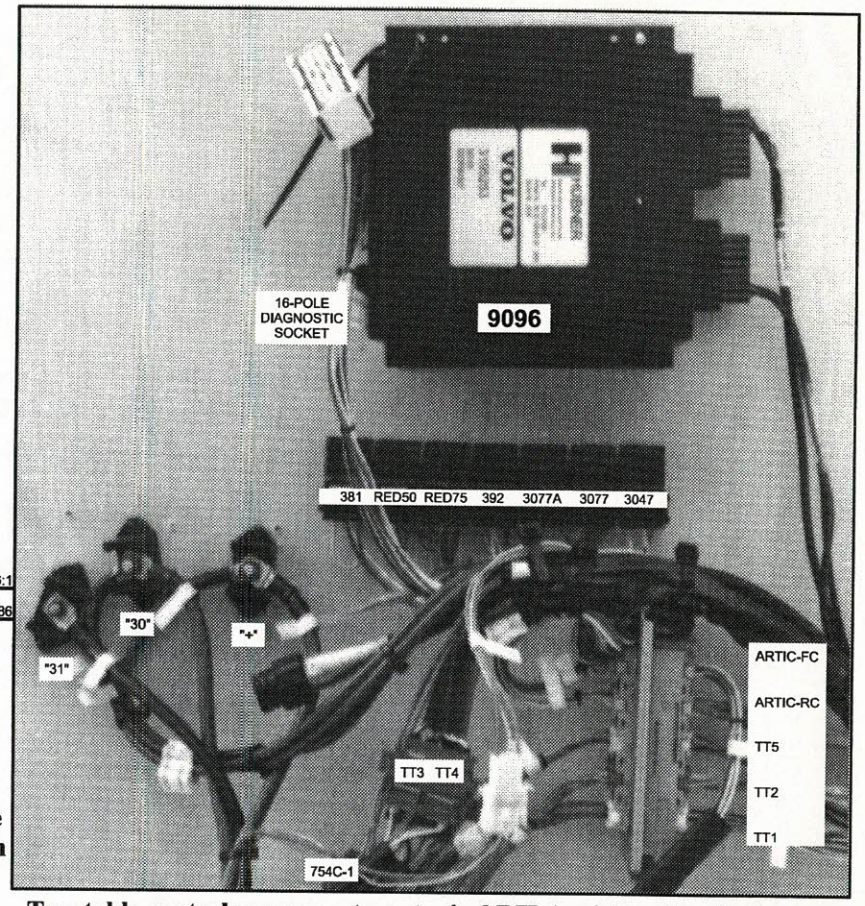

Turntable control components on typical B7LA middle electrical centre

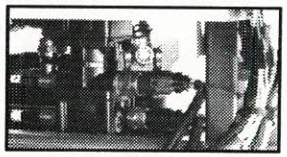

201
Footbrake pressure contact

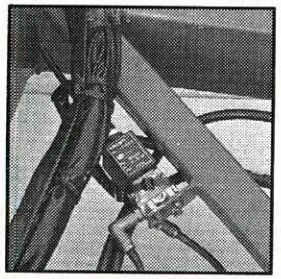

647F

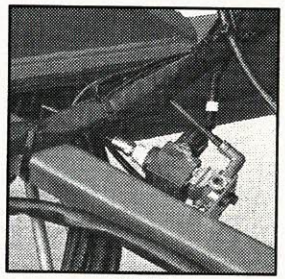

647R

Jack-knife release solenoid valves, front and rear

CD Diagnostic and End-of-line connections

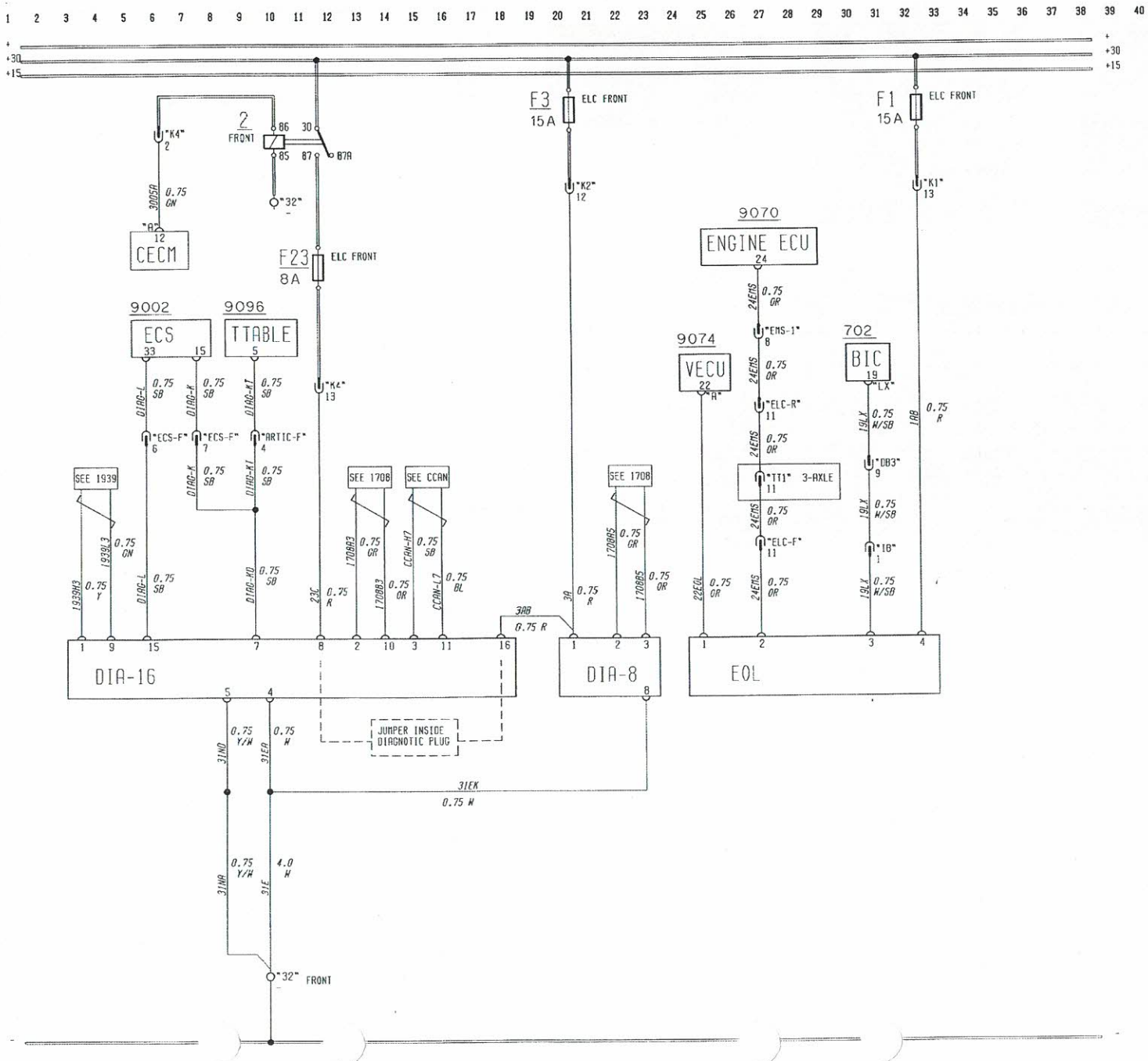

Fuses on front electrical centre card

Fuse	Rating	Circuit protected by fuse
F1	15A	EOL "+30" feed
F3	15A	DIA-8 and DIA-16 "+30" feed

No.	Component
702	Bus Instrument Cluster (BIC)
9002	Electronically-controlled Suspension (ECS) control unit
9070	Fuel injection control unit (Engine ECU)
9074	Vehicle Electronic Control Unit (VECU)
9096	Turntable control unit
CECM-C	Central Electronic Control Module, chassis
DIA-8	8-pin diagnostics connector
DIA-16	16-pin diagnostics connector
EOL	End-of-Line connector

CD Circuit descriptions

When the bare chassis is delivered to the coachbuilder, the EOL End-of-Line, DIA-8 and DIA-16 diagnostic connectors are located on the front electrical centre. They may however be repositioned when the body is fitted to the chassis.

End-of-Line connector

This connector gets its name from the fact that it is required to be used at the end of the production line. Data is inserted into the vehicle electronic control units to configure and if necessary reprogram them to suit the vehicle specification. This adapts the bus electrical system to take account of such parameters as whether it is articulated or not, which transmission has been installed, etc.

The EOL socket receives its power from the "+30" line via fuse F1 in the front electrical centre, and is used to connect a personal computer containing the appropriate end of line program to the Vehicle Electronic Control Unit (9074), the Engine Electronic Control Unit (9070) and the Bus Instrument Cluster (702), all of which contain parameters that are determined by the vehicle specification.

DIA-8 diagnostic connector

As its name implies, this is an eight-pin connector that can be used with a diagnostic interface and a personal computer loaded with the appropriate diagnostic programs to interrogate the electronic control units that are connected to the J1587/1708 databus, in particular the ZF or Voith automatic transmissions, to read their diagnostic codes and data.

DIA-16 diagnostic connector

All three databuses can be checked by plugging a personal computer loaded with the appropriate diagnostic programs into this connector. Even the turntable and electronically-controlled suspension control units can be interrogated and diagnosed from here.

When the external plug is connected to DIA-16, a jumper in the plug between pins 8 and 16 ensure that the "+30" line feed at pin 16 is also made available to pin 8 and from there to pin 1 of the ECS control unit (9002). This pin is normally supplied via fuse F23 (front) and relay RL2 (front) normally-open contact, refer to Schematic JA or JB. The jumper connection permits (9002) to be interrogated while the rest of the bus electrical system is switched off.

Refer to the separate Service documentation for further information regarding the interconnections and use of these connectors and their associated personal computer programs.

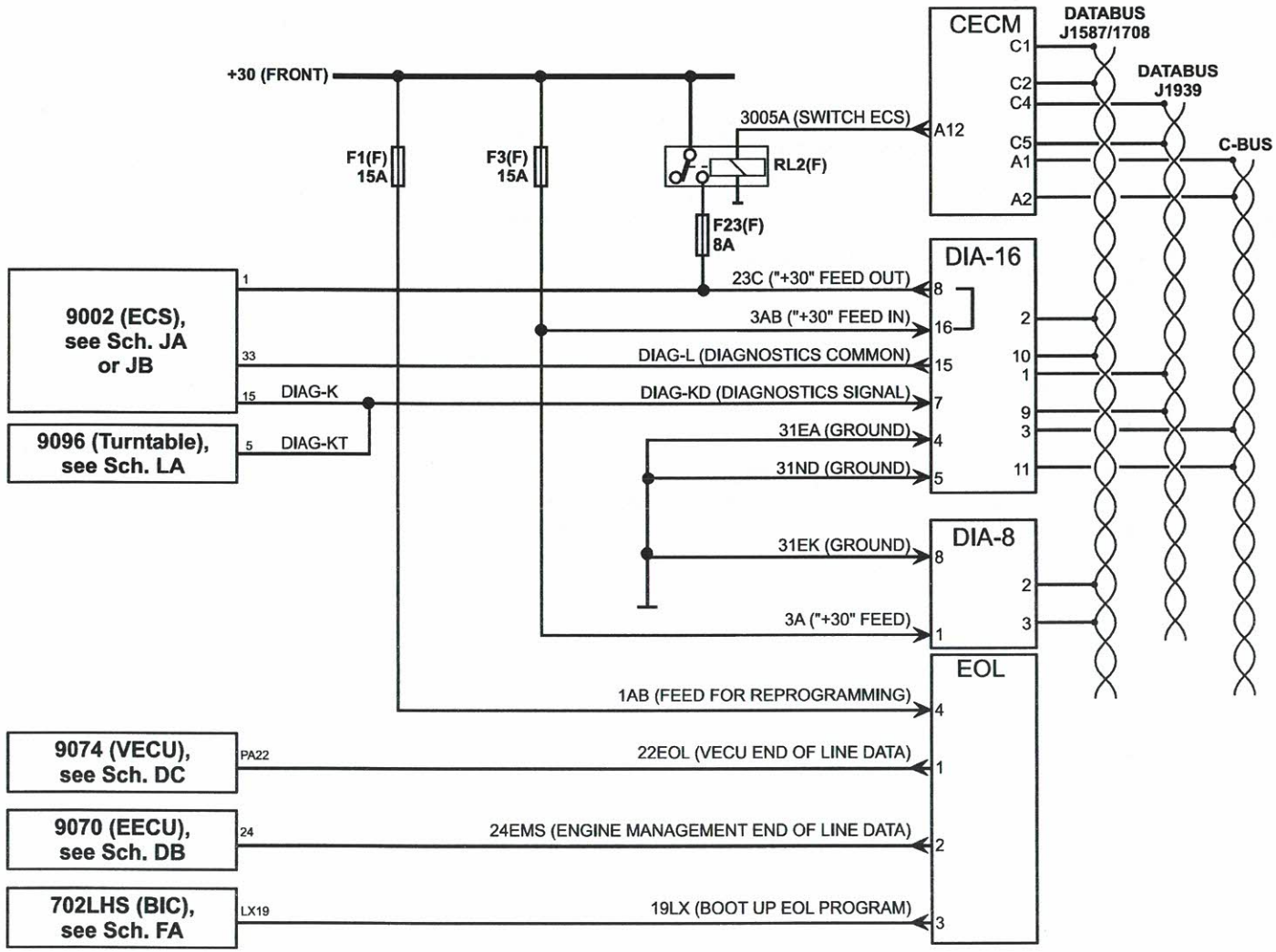
+30 (FRONT)
F1(F)
15A
F3(F)
15A
RL2(F)
F23(F)
8A
3005A (SWITCH ECS)
CECM
A12
C1
C2
C4
C5
A1
A2
DATABUS
J1587/1708
DATABUS
J1939
C-BUS
DIA-16
23C ("+30" FEED OUT)
3AB ("+30" FEED IN)
DIAG-L (DIAGNOSTICS COMMON)
DIAG-KD (DIAGNOSTICS SIGNAL)
31EA (GROUND)
31ND (GROUND)
9002 (ECS),
see Sch. JA
or JB
DIAG-K
9096 (Turntable),
see Sch. LA
DIAG-KT
DIA-8
31EK (GROUND)
3A ("+30" FEED)
EOL
1AB (FEED FOR REPROGRAMMING)
9074 (VECU),
see Sch. DC
PA22
22EOL (VECU END OF LINE DATA)
9070 (EECU),
see Sch. DB
24
24EMS (ENGINE MANAGEMENT END OF LINE DATA)
702LHS (BIC),
see Sch. FA
LX19
19LX (BOOT UP EOL PROGRAM)

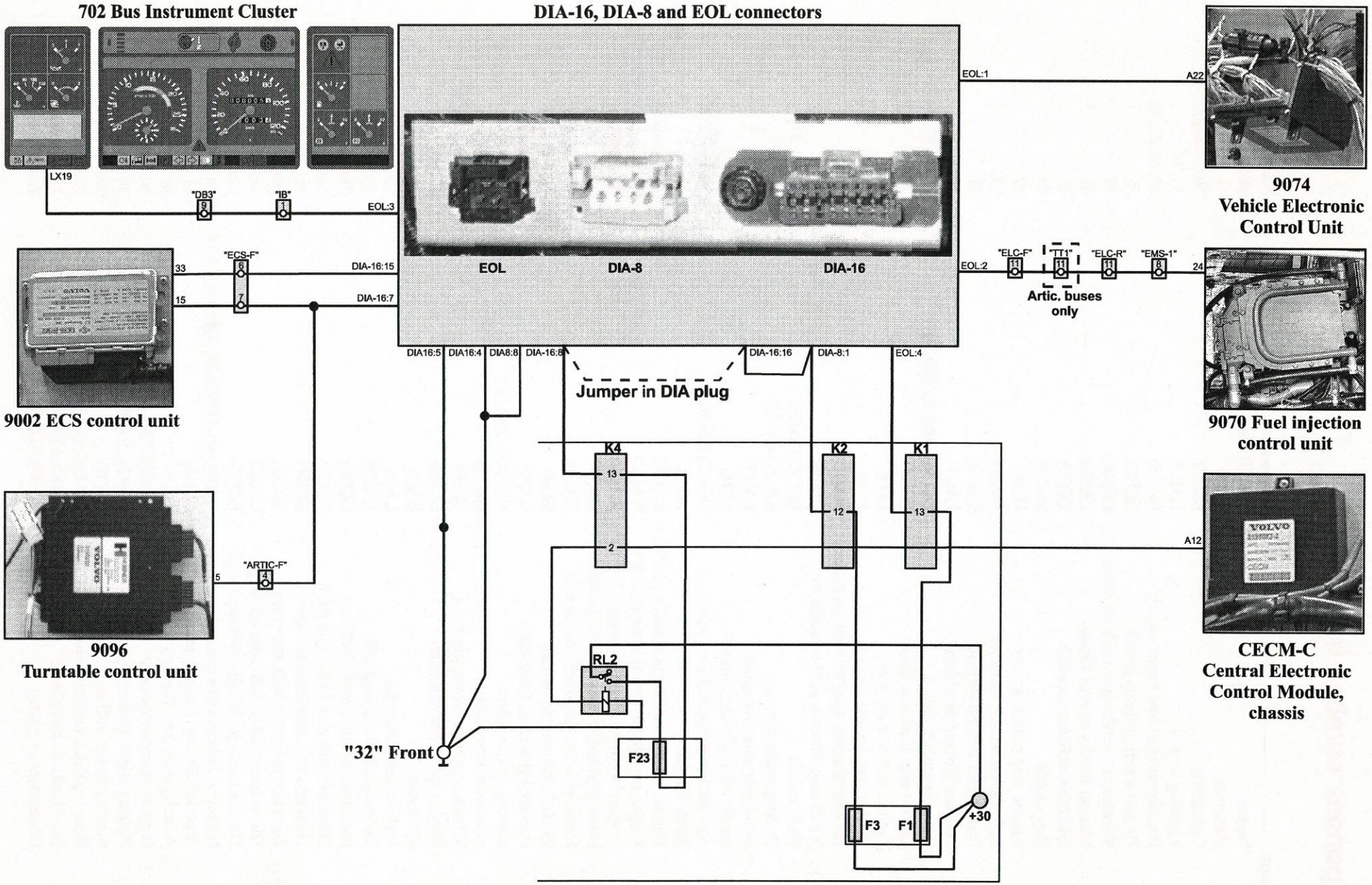

Fuse and relay locations on front electrical centre printed circuit card

Component number index

Component No.	Name	Schematic Nos. (Paths)	Shown on page(s)
30	Batteries	EA(4)	41
34	Connector	EB(12)	Not shown
100	Lighting switch	GA(13)	53,71
101	Headlights high/low beam switch	GA(25)	57,61,65,71
109	Hazard warning lights switch	GC(32)	75
119	Windscreen wash/wipe stalk switches	GF(30)	83
144	Manual battery master switch	EA(38)	41
147	Direction indicators switch	GC(20)	75
150	Key switch	EC(39)	49
160	Engine stop button at rear	EC(5)	49
175	Raise/lower switch (option)	JA(20)	103
180	Emergency cut-out switch	EA(37)	41
181	Jack-knife override switch	LA(2)	129
182	Retarder enable switch	DC(36),HA(55),HB(59)	33,87,91
185A	Engine start button at front	EC(17)	49
185B	Engine start button at rear	EC(9)	49
186	Engine start enable switch	EC(2)	45,49
196	ZF auto. transm. gear selector switches	HA(12)	87
196	Voith auto. transm. gear selector sw.	HB(28)	91
199	Feed switch	EC(20),GA(8)	49,53,71
200	Parking brake contact	KB(25),KF(20)	115,118
201	Footbrake pressure contact	LA(13)	129
216	Brake lights closing contact	GD(6)	79
218	Auxiliary parking brake contact	DC(12),KF(26)	33,115,118
223	Horn buttons	KC(5)	116
254A	Engine bay thermal break contact, 150°C	KA(22)	Not shown
254B	Engine bay thermal break contact, 110°C	KA(22)	111
254C	Engine bay thermal break contact, 110°C	KA(22)	Not shown
(306)	Headlights high beam relay (external)	GA(29)	Not shown
(307)	Headlights low beam relay (external)	GA(18)	Not shown
(308)	Brake lights relay (external)	GD(8)	Not shown
(309)	Parking lights relay (external)	GA(4)	Not shown
312	Starting heater relay	DB1(53),DB2(53)	25,29,53
317	Headlight wiper relay	GF(15)	Not shown
321	Windscreen interval wiping relay	GF(30)	Not shown
323	Flasher unit electronic relay	GC(19)	57,65,75
342	Main relay	EA(9)	41
381	Jack-knife release relay	LA(61)	129
392	Turntable feed warning relay	LA(23)	129
422	Direction indicator bulb, left front	GC(26)	Not shown
423	Direction indicator bulb, right front	GC(27)	Not shown
426	Direction indicator bulb, left rear	GC(31)	Not shown
427	Direction indicator bulb, right rear	GC(33)	Not shown
462	Dir. indicator bulb, left side/roof edge	GC(22)	Not shown
463	Dir. Indicator bulb, right side/roof edge	GC(24)	Not shown
500L/R	Direction indicators indicator lamps	FB(44,46),FD(38,39),GC(4,6,13,16)	Not shown
500LA	Aux. left dir. ind. flashing relay	GC(16)	61
500RA	Aux. right dir. ind. flashing relay	GC(9)	61
504	High beam indicator lamp	FB(49),FD(44),GA(32,36)	Not shown
508	Parking brake off warning lamp	FB(42),FD(36)	Not shown
528	Starting heater indicator lamp	FA(52)	Not shown
536	Rear fog lights indicator lamp	FB(38),FD(32)	Not shown
542	Door brake warning lamp	FB(55),FD(49)	Not shown
547	Central warning lamp	FB(47),FD(43)	Not shown

603	Engine stop solenoid valve	DB1(26)	25,29
626	Exhaust gas pressure solenoid valves	DB1(40),DB2(45)	25,29
647F	Jack-knife release sol. valve, front	LA(36)	129
647R	Jack-knife release sol. valve, rear	LA(55)	129
650	Windscreen wiper motor	GF(31)	Not shown
651	Windscreen washer pump motor	GF(1)	Not shown
652L	Headlight wiper motor, left	GF(10)	Not shown
652R	Headlight wiper motor, right	GF(15)	Not shown
653	Headlight washer pump motor	GF(6)	Not shown
654	Starter motor	EB(8)	45
658	Alternator 2	EB(16)	45
660	Alternator 1	EB(11)	45,57
702	Body Instrument Cluster (BIC)	CD(30),DB1(48),DB2(48),EB(11,40), FA(4),FB(11),FC(4),FD(6),GA(14), HB(3),IA(34),IB(32),KA(4),KG(5), KH(4)	45,53,57,61,65,71, 75,91,95,99,103, 107,111,115,120, 122,133
709	Tachograph clock	FB(12)	Not shown
753A	Engine camshaft speed sensor	DB1(5),DB2(5)	25,29
753B	Engine crankshaft speed sensor	DB1(8),DB2(8)	25,29
754A	Front brake circuit air pressure sender	KG(12)	120
754B	Rear brake circuit air pressure sender	KG(17)	120
754C	Pusher brake circuit air pressure sender	KG(24)	120
756B	Coolant temperature sensor	DB1(24),DB2(24)	25,29
757	Fuel level sender	KH(20)	122
759	Coolant level sensor	DB1(15),DB2(15)	25,29
763B	Cooling fan hydraulic oil level sensor	EC(12)	49
800	Starting heater element	DB1(57),DB2(57)	25,29,53
805	Panel lamps dimmer rheostat	DC(38),FA(3),FB(21),FC(8),FD(13), GA(6),GC(36),HA(54),HB(58),JA(12),	33,53,61,75,87 KF(5),LA(3)
807F	Retarder foot control	DC(22),GD(39)	33,79
807H	Retarder hand control	DC(45)	33
850	Horn	KC(10)	116
853	Buzzer	DD(22),FE(16)	37,67
903	Diode	EC(44),FB(30,36,49),FD(31,45), GA(12,22),HA(26)	Not shown
903/216	Diode, brake lights closing contact	GD(7)	Not shown
909	Voith automatic transm. control unit	HB(16),IA(38),IB(36)	91
909	ZF automatic transmission control unit	HA(14),KB(40)	87,115
1102	Kneeling switch	JA(10)	103
1129	Alternative gearshift program switch	HA(26),HB(29)	87,91
1135	Cruise control switches	DC(33)	33
1152	Multi-function display control	FA(37)	53
1158	Steering wheel adjustment switch	KF(4)	118
2072	Cooling fan hydr. oil filter press. sensor	EC(15)	49
3047	Jack-knife brake relay	LA(32)	129
3077	Reversing speed limit relay	LA(50)	129
3077A	Jack-knife engine idle relay	LA(54)	129
5003	ECS kneel indicator lamp	FB(39),FD(34)	Not shown
5009	ABS indicator lamp	FB(57),FD(50)	Not shown
5032	Driver seat belt warning lamp	FB(51),FD(45)	Not shown
6013	Wheel brake ABS solenoid valves	IA(11,19,27,35), IB(10,18,26,34,44,52)	95,99
6015	Doors solenoid valve	IA(23),IB(23)	95,99
6023	Fuel shut-off solenoid valve	EA(33)	41
6035F	ECS solenoid valve block, front	JA(21)	103
6035R	ECS solenoid valve block, rear	JA(40)	103
6035RI	ECS solenoid valve block, pusher chassis	JB(6)	107
6071	Fuel injection pump	DB1(44),DB2(44)	25,29

6107	Steering wheel adjustment sol. valve	KF(18)	118
7052	Transmission speed sender	FB(23),FD(7)	57,65
7057	Road wheel rotation ABS sender	IA(7,15,24,32), IB(8,15,24,31,41,49)	95,99
7064	Air suspension pressure low contact	JA(15)	103,107
7065	Accelerator pedal position sensor	DC(19)	33
7069	Ammeter sensor	FA(28)	53
7072	ECS height sender	JA(30,34,48,52),JB(16,22)	103,107
7073	Fuel injector needle valve sensor	DB1(11),DB2(11)	25,29
7081	Turbo boost pressure and temp. sensor	DB1(16),DB2(16)	25,29
7082	Engine oil pressure and temp. sensor	DB1(28),DB2(27)	25,29
7083	Fuel pressure and temperature sensor	DB1(1),DB2(1)	25,29
7084	Air filter pressure drop and ambient temperature sensor	DB1(7),DB2(7)	25,29
8019	Oil separator solenoid valve	GD(3)	79
9002	ECS control unit	CD(6),JA(33)	103,133
9002R	ECS control unit, pusher (artic.) chassis	JB(15)	107
9008	ABS control unit	FB(56),FD(49),IA(8),IB(6),HB(3)	57,61,65,87,91
9029	Databus termination resistors	BA(3),BC(39)	Not shown
9070	Engine electronic control unit	CD(27),DB1(1),DB2(1),EA(24), FA(57)	25,29,33,53,133
9074	Vehicle Electronic Control Unit (VECU)	CD(25),DB1(28),DB2(28),DC(2), EA(27),EC(29),FB(33),FD(13), GD(28),GF(22),HA(50),HB(54), KB(37),KF(28)	25,29,33,41,49,57, 65,79,83,87,91,118, 127,133
9096	Turntable control unit	CD(9),LA(23,47)	127,133
ASR	ASR solenoid valve	IA(15),IB(15)	95,99
CECM-C	Central Electronic Control Module, chassis	CD(6),DC(12,54),DD(9),EA(32), EB(36),EC(35),FA(28),FB(29,42,46), FC(23,54),FD(35,38),FE(17),GA(14), GD(18),KA(6),KB(23),KF(16), KG(17),KH(9),LA(10,19)	41,45,49,53,57,61, 65,67,71,79,87,91, 103,107,111,115, 118,129,133
CM-1	Control Module 1	EB(21),EC(8),KA(21)	45,49,111
CM-2	Control Module 2	KG(23),LA(18,34)	129
CM-3	Control Module 3	EC(38),HA(23),JA(30),KH(17)	49,87,103,107
CM-4	Control Module 4	DC(3),EB(32),EC(42),GA(14), GD(12),KA(14),KB(31)	33,45,49,71,79,91, 111,115
CONV	Frequency converter	FB(67)	Not shown
DIA-8	8-pole diagnostic connector	CD(21)	87,91,133
DIA-16	16-pole diagnostic connector	CD(4),JA(55),LA(16)	87,91,127,133
EOL	End Of Line connector	CD(26),DB1(32),DB2(32),DC(7), FA(3)	25,29,33,53,133
FAN SPEED SENSOR			
	Cooling fan speed sensor	DB2(32)	29
HYDRAULIC PUMP			
	Cooling fan hydr. oil restrictor sol. valve	DB2(39)	29
INFO	Information lamp	FA(54)	Not shown
NBS	Neutral on Bus Stop switch	HA(29),HB(31)	87,91
RED50	Engine 50% of max. power relay	LA(45)	129
RED75	Engine 75% of max. power relay	LA(40)	129
STOP	Warning lamp	FA(55)	Not shown

Feedback

One of our objectives is that workshop personnel should have access to correct and appropriate service manuals in respect of fault tracing, repairs and maintenance of Volvo buses.
In order to maintain the high standards of our technical literature, your opinions and experience when using this manual would be greatly appreciated.
If you have any comments or suggestions, please make a copy of this page, write down your comments and send them to us, either via telefax or by mailing directly to the following address.

To

Volvo Bus Corporation AB
Service Publications

Department 83500 ARAK1

SE- 405 08 GÖTEBORG
SWEDEN

Fax: +46 31 664 034

From

.....

.....

.....

.....

.....

.....

.....

Comments/suggestions

.....

.....

.....

.....

.....

.....

.....

.....

.....

.....

.....

.....

Concerning Service Manual: .....

VOLVO
Volvo Bus Corporation
Göteborg, Sweden

TP 16434/1 04.04 Printed in Sweden